ZH2 Block Diagram

PA@ PATA
SA@ SATA
MP@ MINI PCI
MC@ MINI CARD
GS@ G-SENSOR
G9@ 5789
G7@ 5787

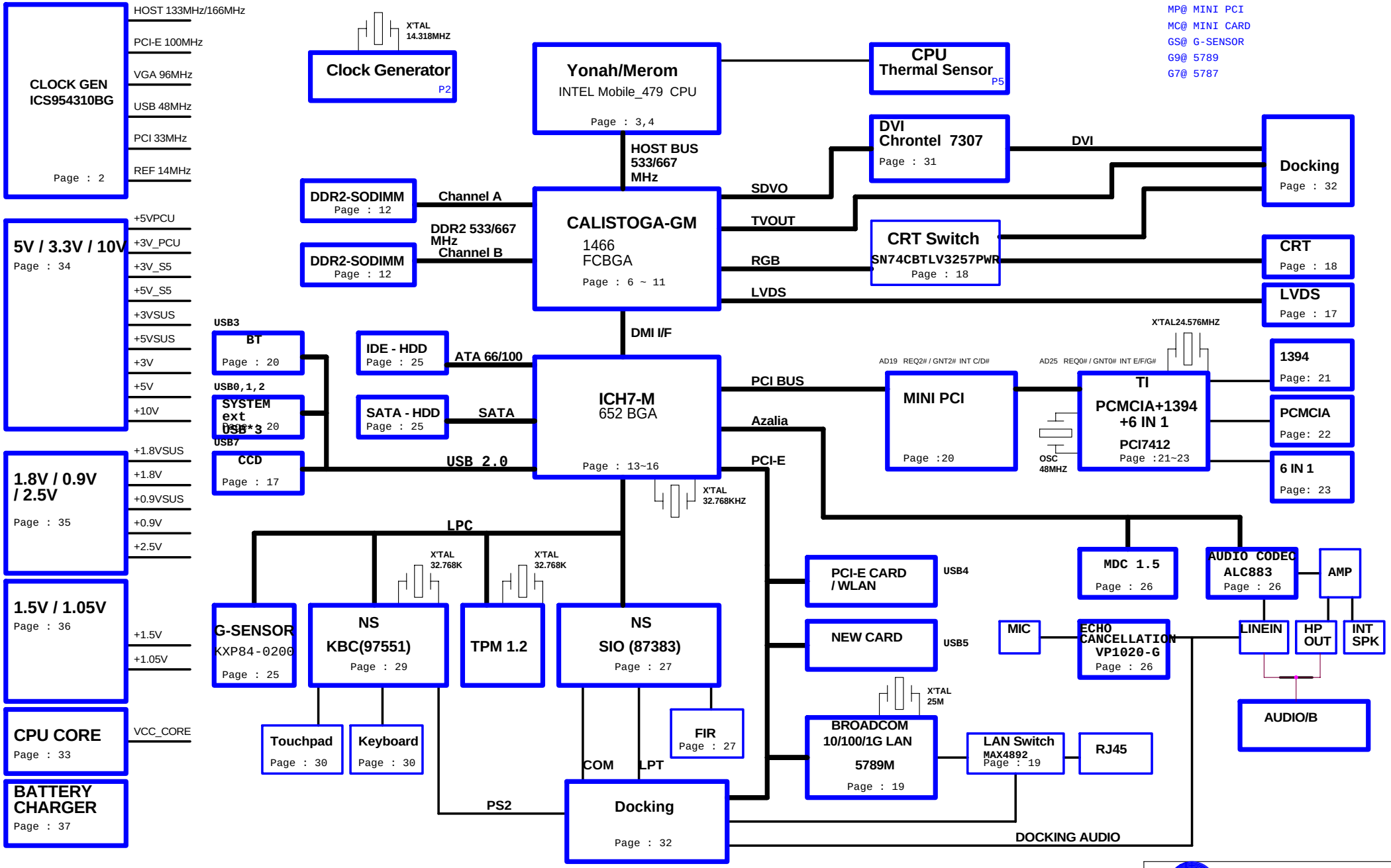

PCI DEVICE	IDSEL#	REQ# / GNT#	Interrupts
PCI7412	AD25	REQ0# / GNT0#	INT E/F/G#
MINI PCI	AD19	REQ2# / GNT2#	INT C/D#

PROJECT : ZH2
Quanta Computer Inc.

Size	Document Number	Rev
	BLOCK DIAGRAM	1A

Date: Monday, January 02, 2006 Sheet 1 of 38

FSC	FSB	FSA	CPU	SRC	PCI
1	0	1	100	100	33
0	0	1	133	100	33
0	1	1	166	100	33
0	1	0	200	100	33
0	0	0	266	100	33
1	0	0	333	100	33
1	1	0	400	100	33
1	1	1	200	100	33

Default

Close to IC <500mils

Place these termination to close CK410M.

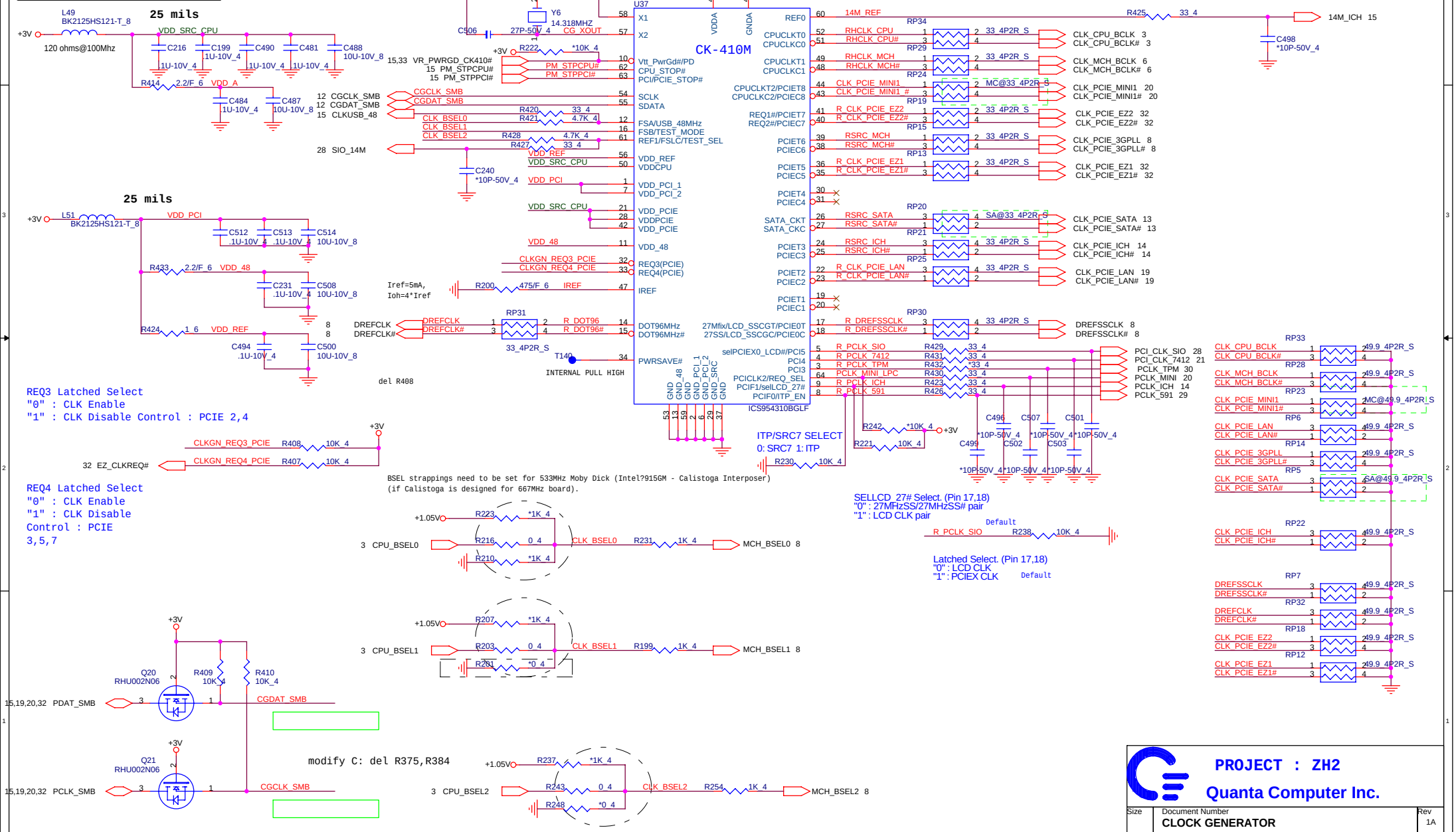

PROJECT : ZH2

Quanta Computer Inc.

Size	Document Number	Rev
	CLOCK GENERATOR	1A

Date: Monday, January 02, 2006 Sheet 2 of 38

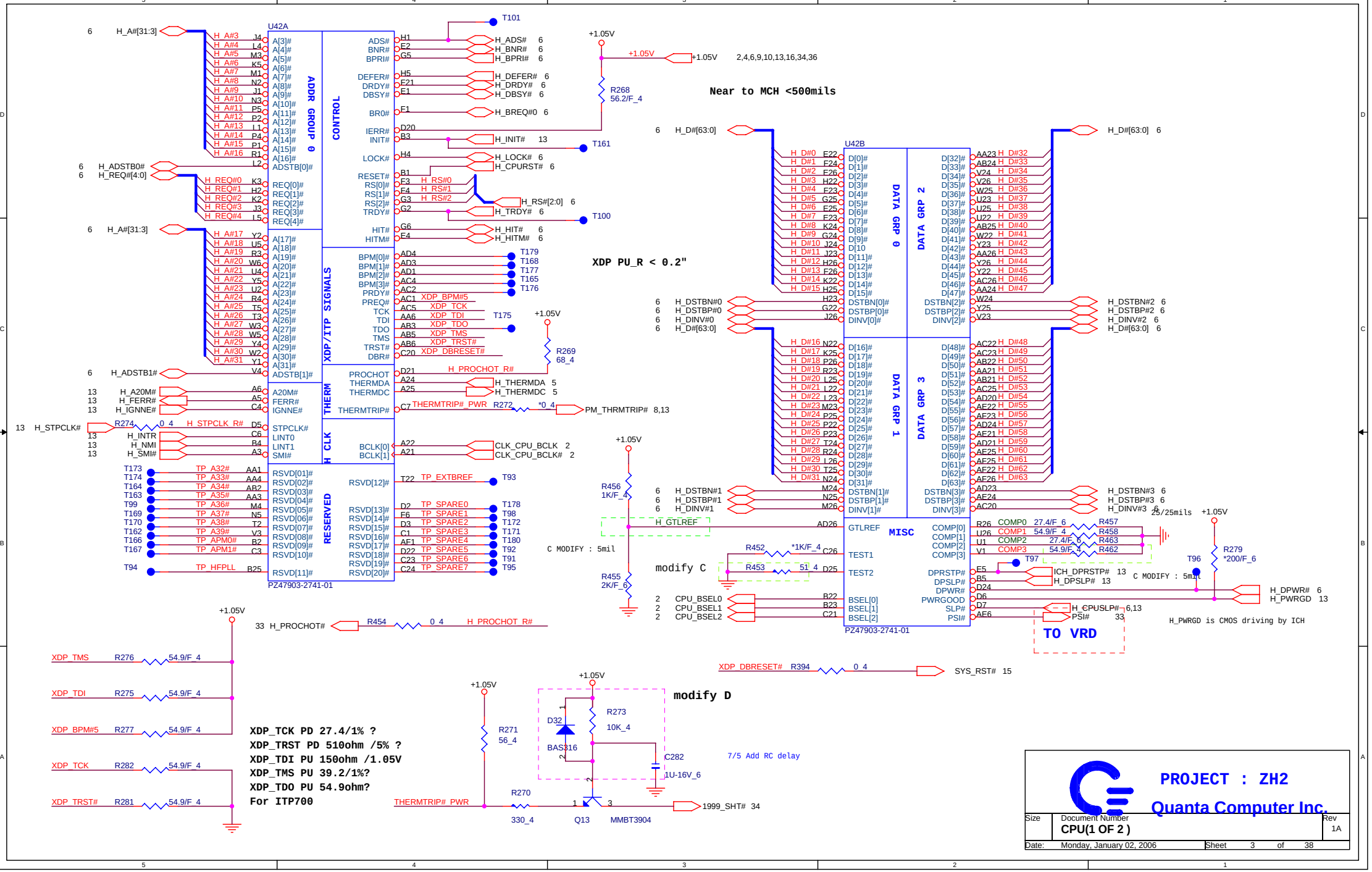
U42A
ADDR GROUP 0
CONTROL
XDP/ITP SIGNALS
THERM
H CLK
RESERVED
PZ47903-2741-01
Near to MCH <500mils
XDP PU_R < 0.2"
U42B
DATA GRP 0
DATA GRP 2
DATA GRP 1
DATA GRP 3
MISC
PZ47903-2741-01
modify C
C MODIFY : 5mil
TO VRD
H_PWRGD is CMOS driving by ICH
XDP_TCK PD 27.4/1% ?
XDP_TRST PD 510ohm /5% ?
XDP_TDI PU 150ohm /1.05V
XDP_TMS PU 39.2/1%?
XDP_TDO PU 54.9ohm?
For ITP700
modify D
7/5 Add RC delay
PROJECT : ZH2
Quanta Computer Inc.
Size
Document Number
CPU(1 OF 2)
Rev
1A
Date: Monday, January 02, 2006
Sheet 3 of 38

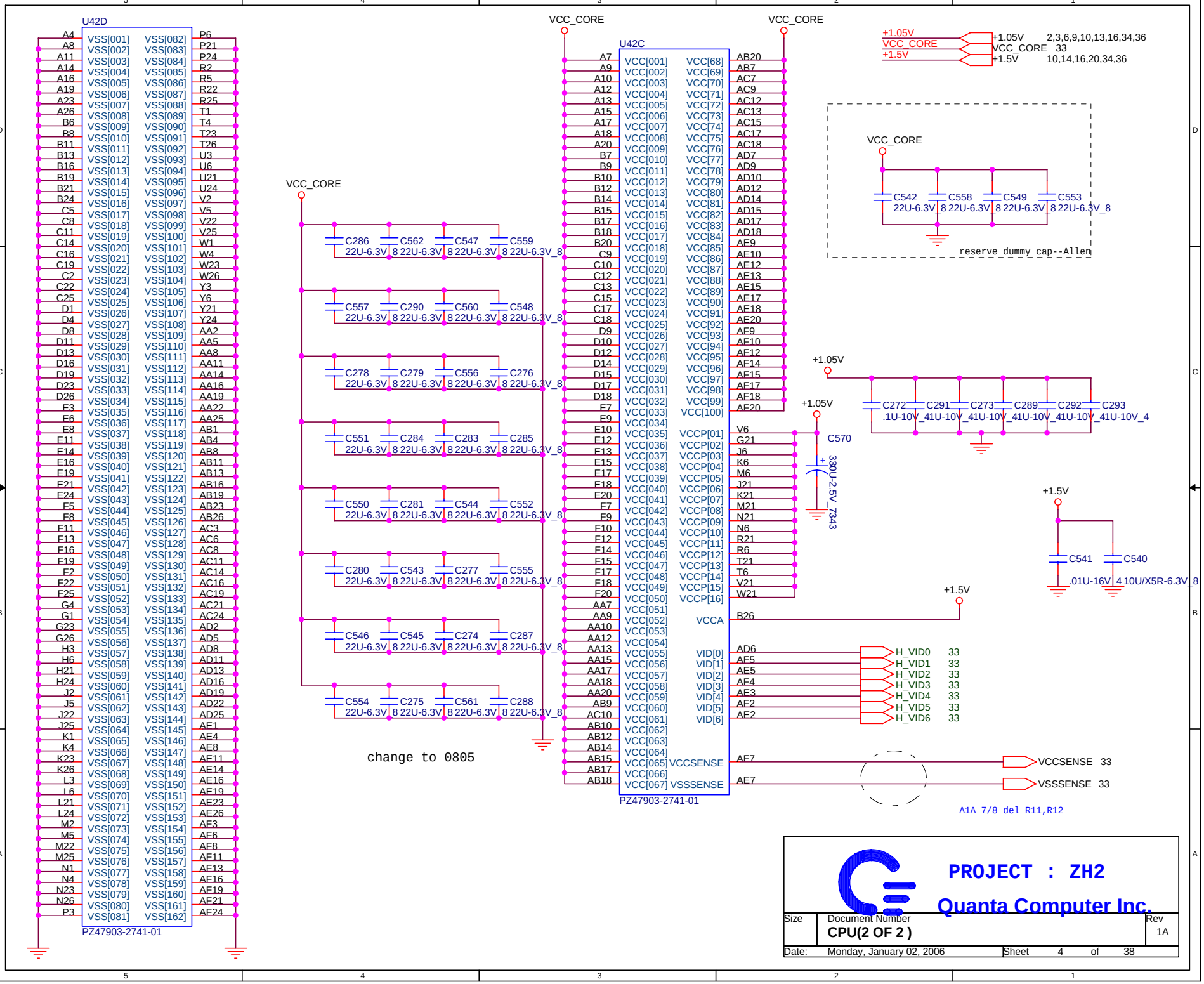
U42D
PZ47903-2741-01
U42C
PZ47903-2741-01
VCC_CORE
+1.05V
+1.5V
reserve dummy cap--Allen
C542 22U-6.3V_8
C558 22U-6.3V_8
C549 22U-6.3V_8
C553 22U-6.3V_8
C272 .1U-10V_4
C291 1U-10V_4
C273 1U-10V_4
C289 1U-10V_4
C292 1U-10V_4
C293 1U-10V_4
C570 330U-2.5V_7343
C541 .01U-16V_4
C540 10U/X5R-6.3V_8
H_VID0 33
H_VID1 33
H_VID2 33
H_VID3 33
H_VID4 33
H_VID5 33
H_VID6 33
VCCSENSE 33
VSSSENSE 33
change to 0805
A1A 7/8 del R11,R12
PROJECT : ZH2
Quanta Computer Inc.
Size
Document Number
CPU(2 OF 2)
Rev
1A
Date: Monday, January 02, 2006
Sheet 4 of 38

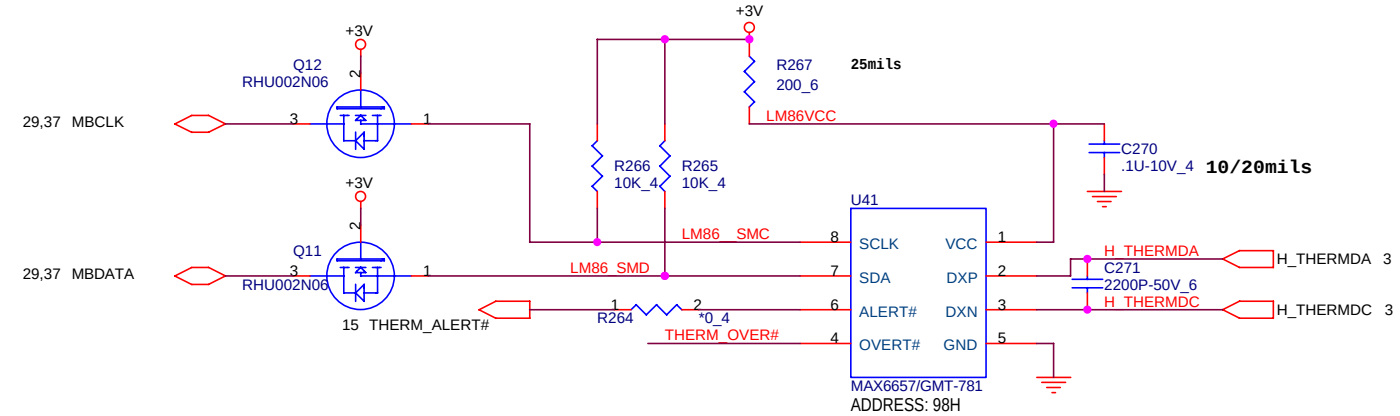

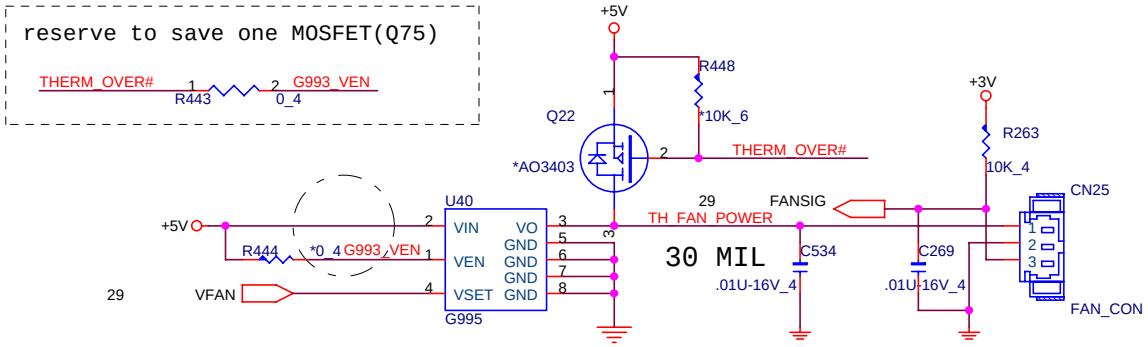

PROJECT : ZH2

Quanta Computer Inc.

Size	Document Number	Rev
	Thermal Sensor LM86	1A

Date: Monday, January 02, 2006 Sheet 5 of 38

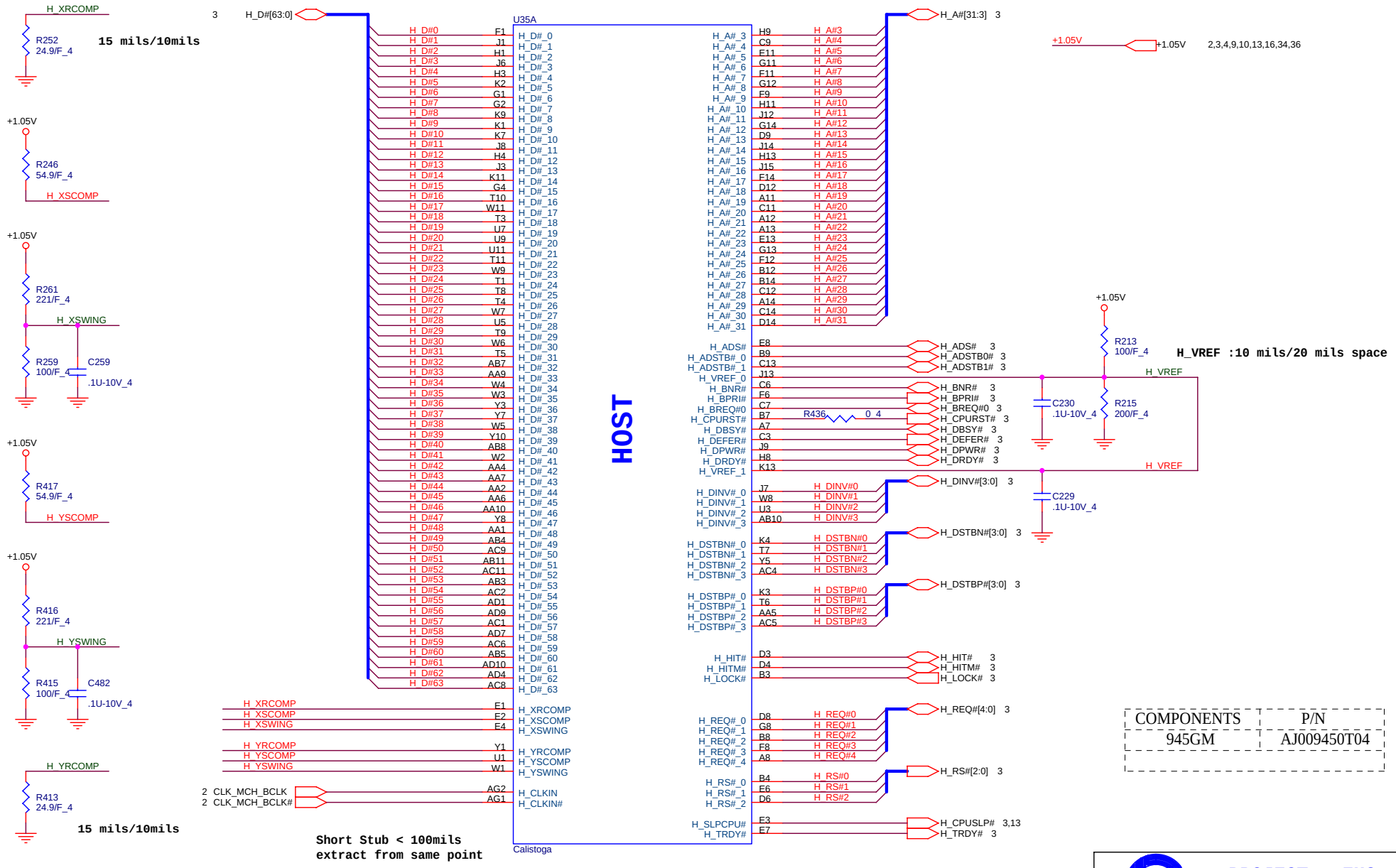

COMPONENTS	P/N
945GM	AJ009450T04

PROJECT : ZH2

Quanta Computer Inc.

Size	Document Number	Rev
	GMCH HOST(1 OF 6)	1A

Date: Monday, January 02, 2006 Sheet 6 of 38

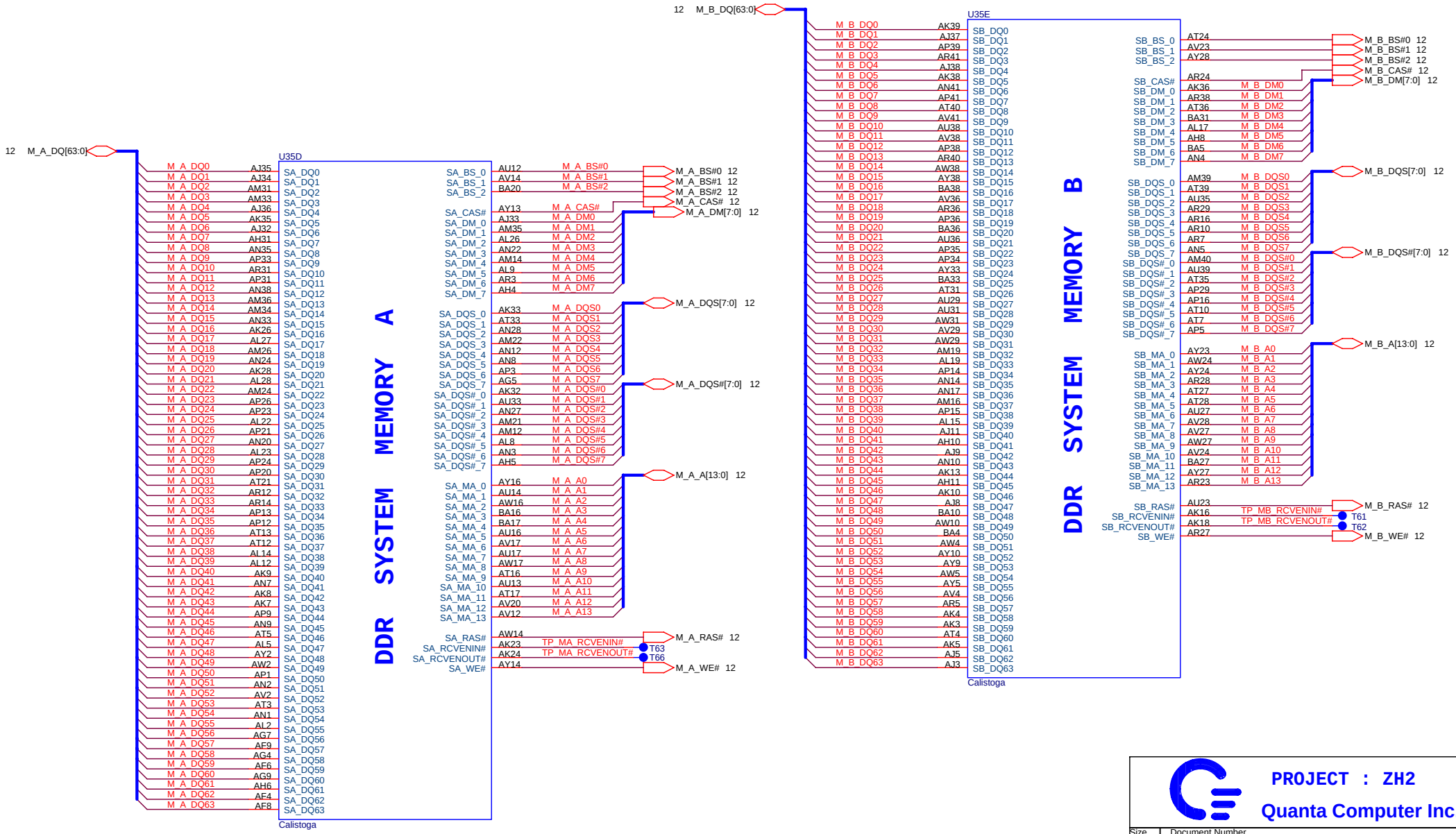

PROJECT : ZH2

Quanta Computer Inc.

Size	Document Number	Rev
	GMCH DDR(2 OF 6)	1A

Date: Monday, January 02, 2006 Sheet 7 of 38

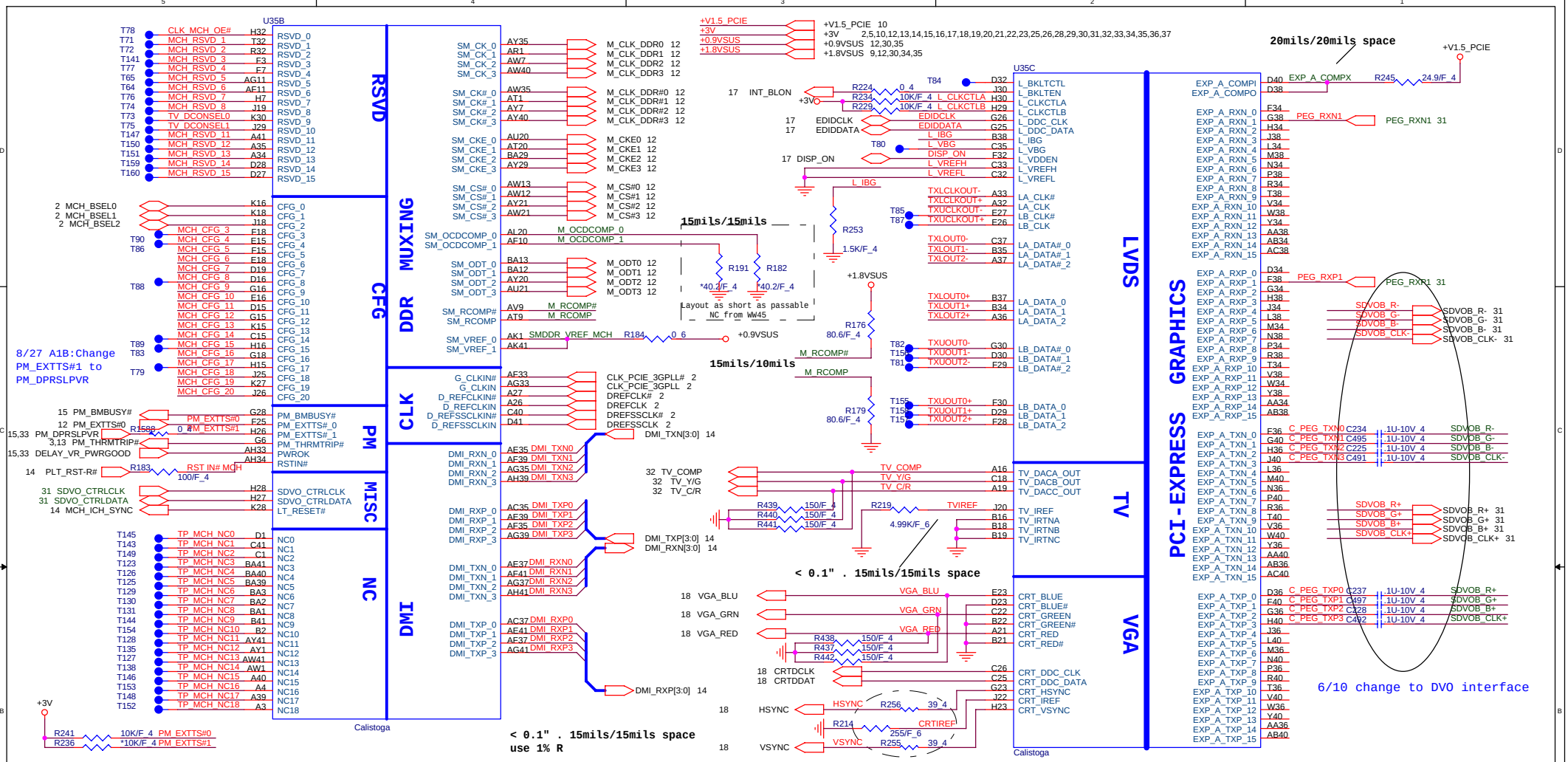

GMCH Strap pin

1. MCH_CFG_5 Low = DMI X2, High=DMIX4
2. MCH_CFG_6 DDR : Low =Moby Dick, High= Calistoga (Default)
3. MCH_CFG_7 CPU Strap Low=RSVD, High=Mobile CPU
4. MCH_CFG_9 PCI Exp Graphics Lane: Low =Reserved,High=Mobility
5. MCH_CFG_10 Host PLL VCC Select: Low=Reserved, High=Mobility
6. **MCH_CFG_11: PSB 4x CLK ENABLE Low=Reserved, High=Calistoga**
7. MCH_CFG_16 FSB Dynmic ODT: Low=Dynamic ODT Disabled, High=Dynamic ODT Enabled.
8. MCH_CFG_18 VCC Select: LOW=1.05V, High=1.5V
9. MCH_CFG_19 DMI LANE Reversal: Low=Normal,High=LANES Reversed.
10. MCH_CFG_20 PCIE Backward interpoerability mode: Low= only SDVO or PCIE x1 is operational (defaults) ,High=SDVO and PCIE x1 are operation simultaneously via the PEG port.

PROJECT : ZH2

Quanta Computer Inc.

Size	Document Number	Rev
	GMCH DMI/VEDIO(3 OF 6)	1A

Date: Monday, January 02, 2006 Sheet 8 of 38

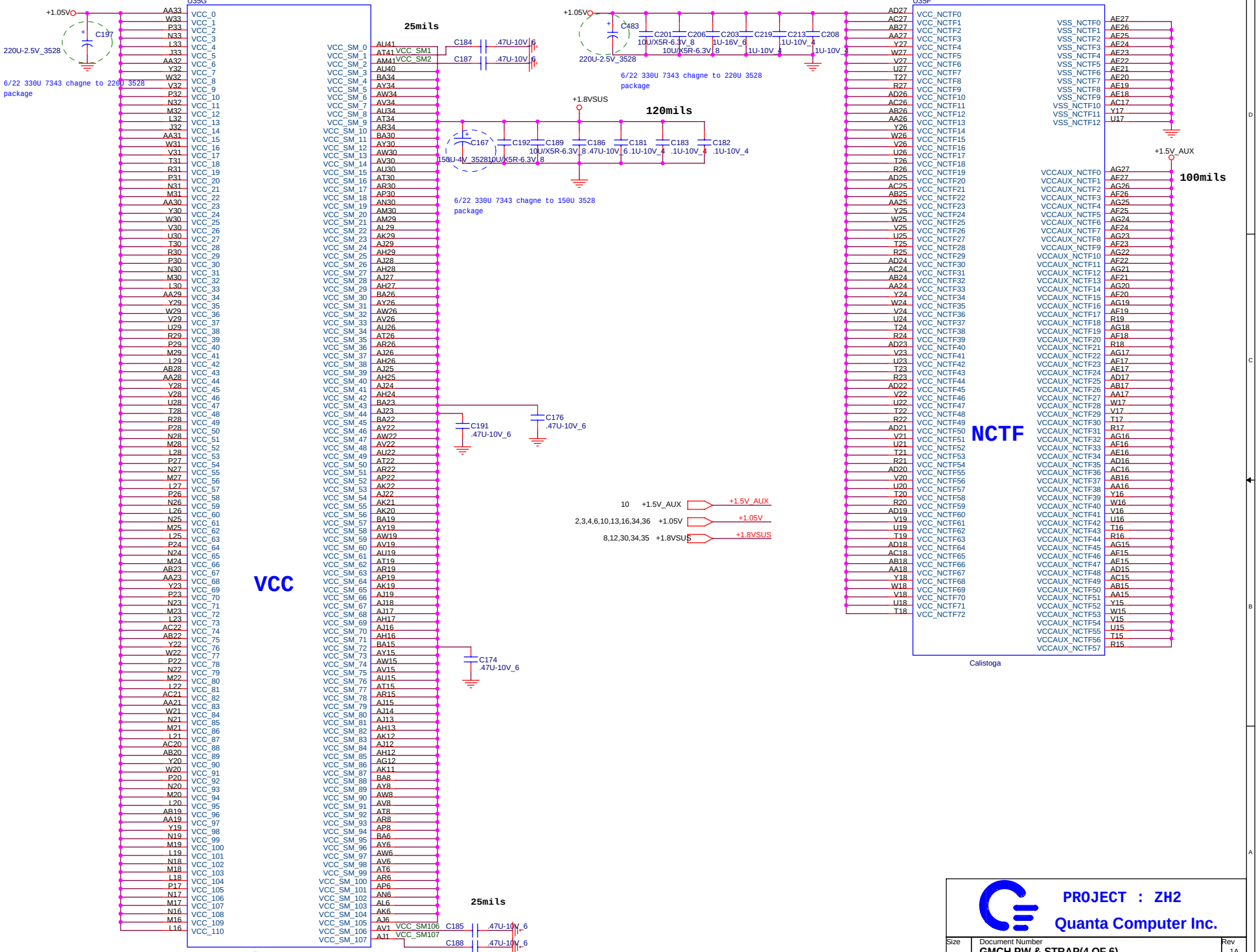

PROJECT : ZH2

Quanta Computer Inc.

Size	Document Number	Rev
	GMCH PW & STRAP(4 OF 6)	1A

Date: Monday, January 02, 2006 Sheet 9 of 38

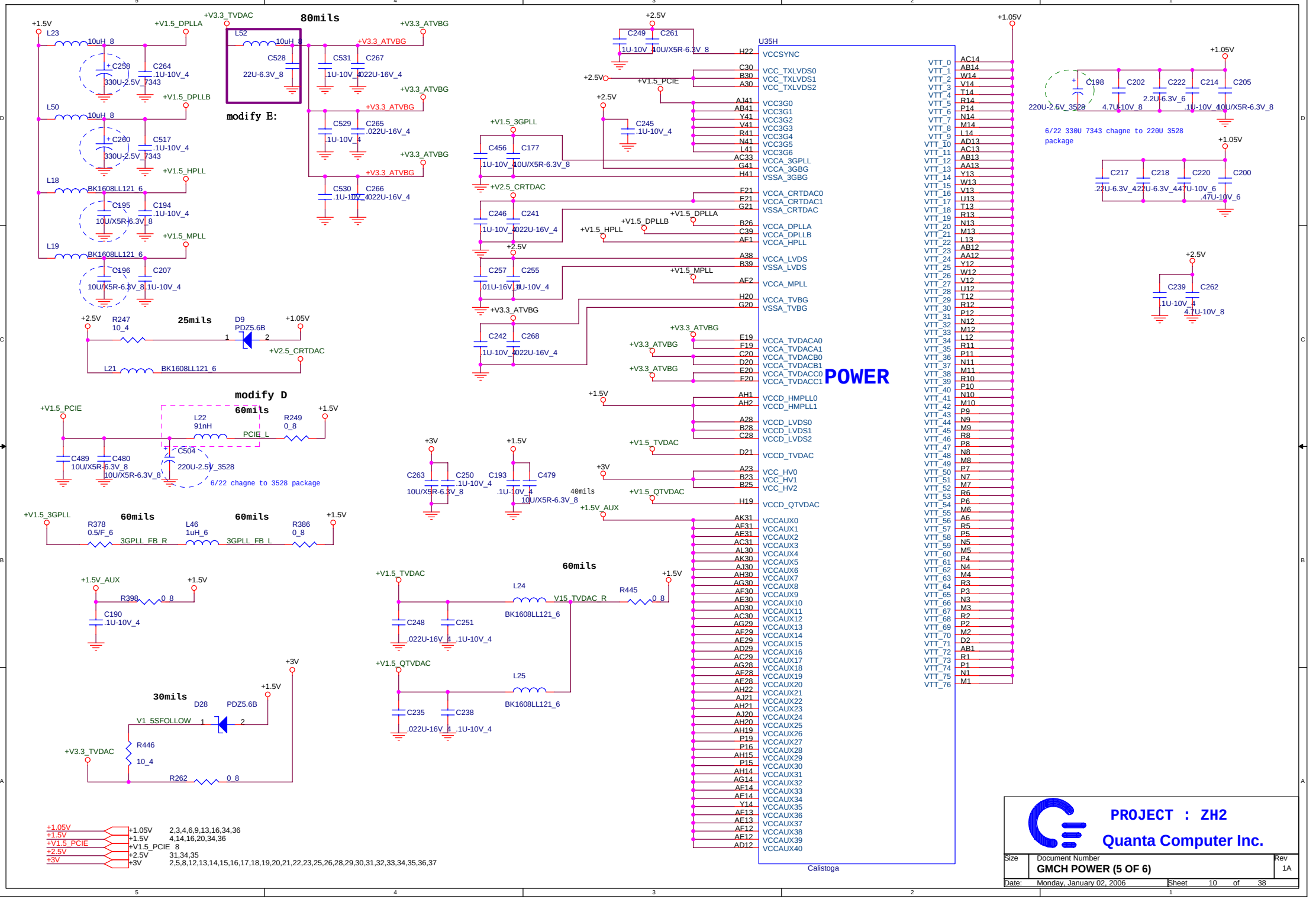
80mils
modify E:
modify D
25mils
60mils
30mils
40mils
6/22 330U 7343 chagne to 220U 3528 package
6/22 chagne to 3528 package
U35H
POWER
Calistoga
PROJECT : ZH2
Quanta Computer Inc.
Size
Document Number
GMCH POWER (5 OF 6)
Rev
1A
Date: Monday, January 02, 2006
Sheet 10 of 38

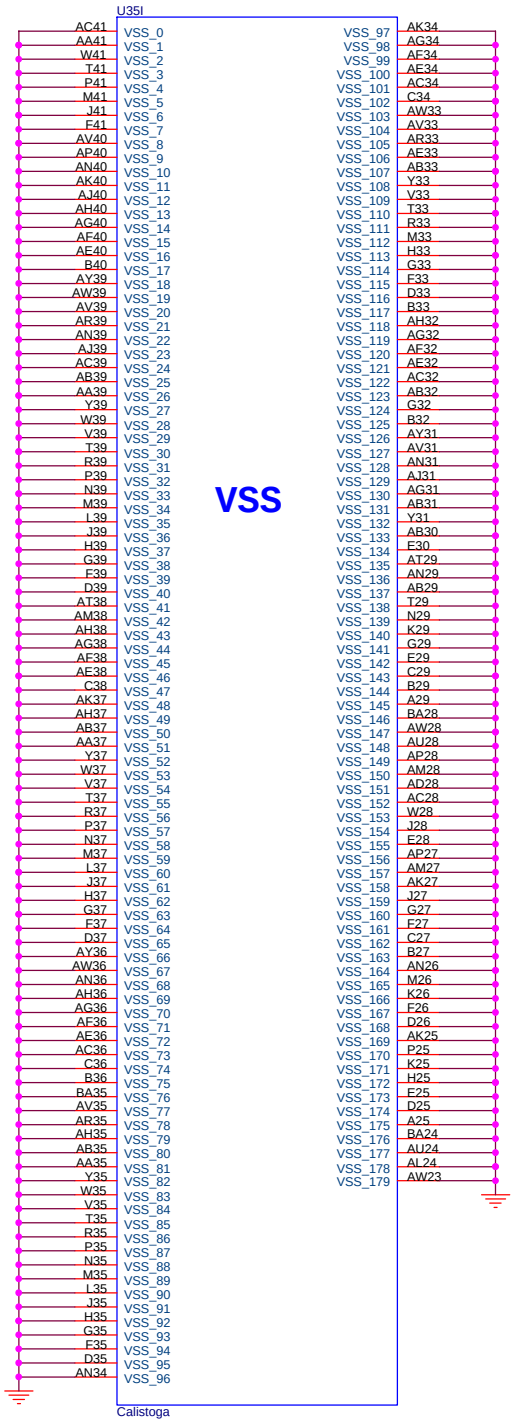

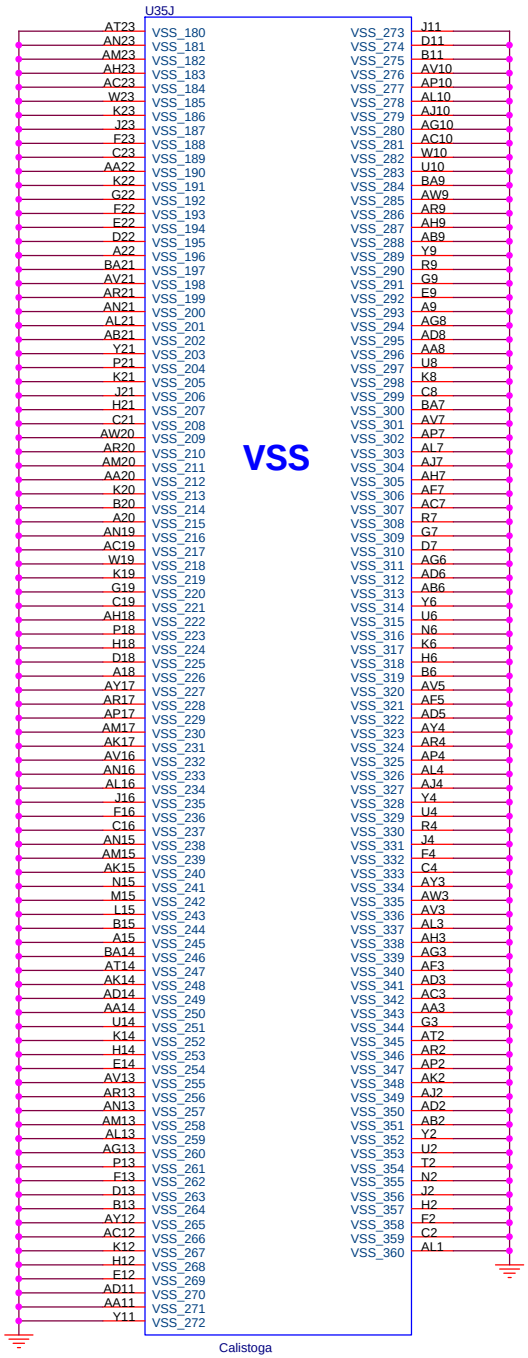

PROJECT : ZH2

Quanta Computer Inc.

Size	Document Number	Rev
	GMCH GND(6 OF 6)	1A

Date: Monday, January 02, 2006 Sheet 11 of 38

TERMINATOR DECOUPLING CAPACITOR

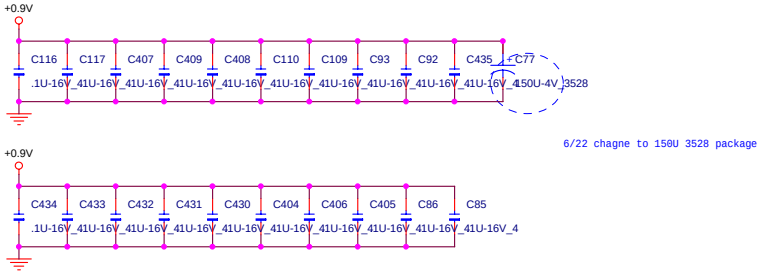

DDR2 TERMINATOR

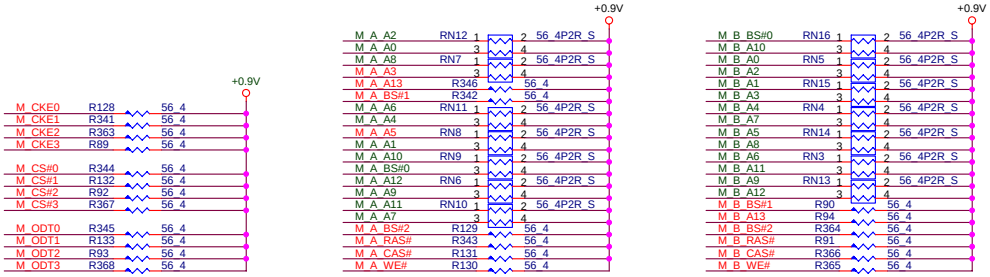

DDR2 SO-DIMM SOCKET

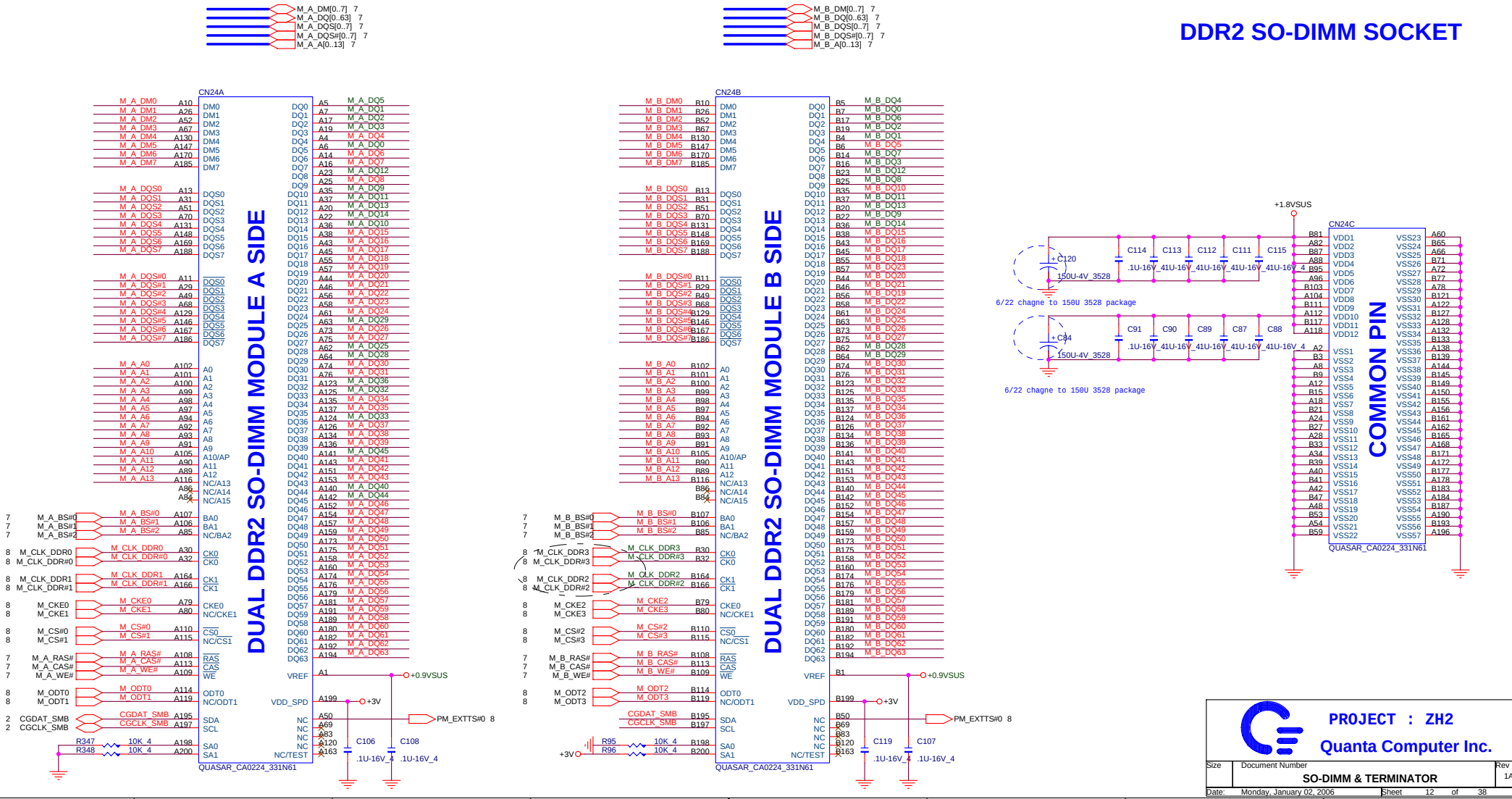

PROJECT : ZH2	
Quanta Computer Inc.	
Size	Document Number: SO-DIMM & TERMINATOR	Rev 1A
Date: Monday, January 02, 2006	Sheet 12 of 38

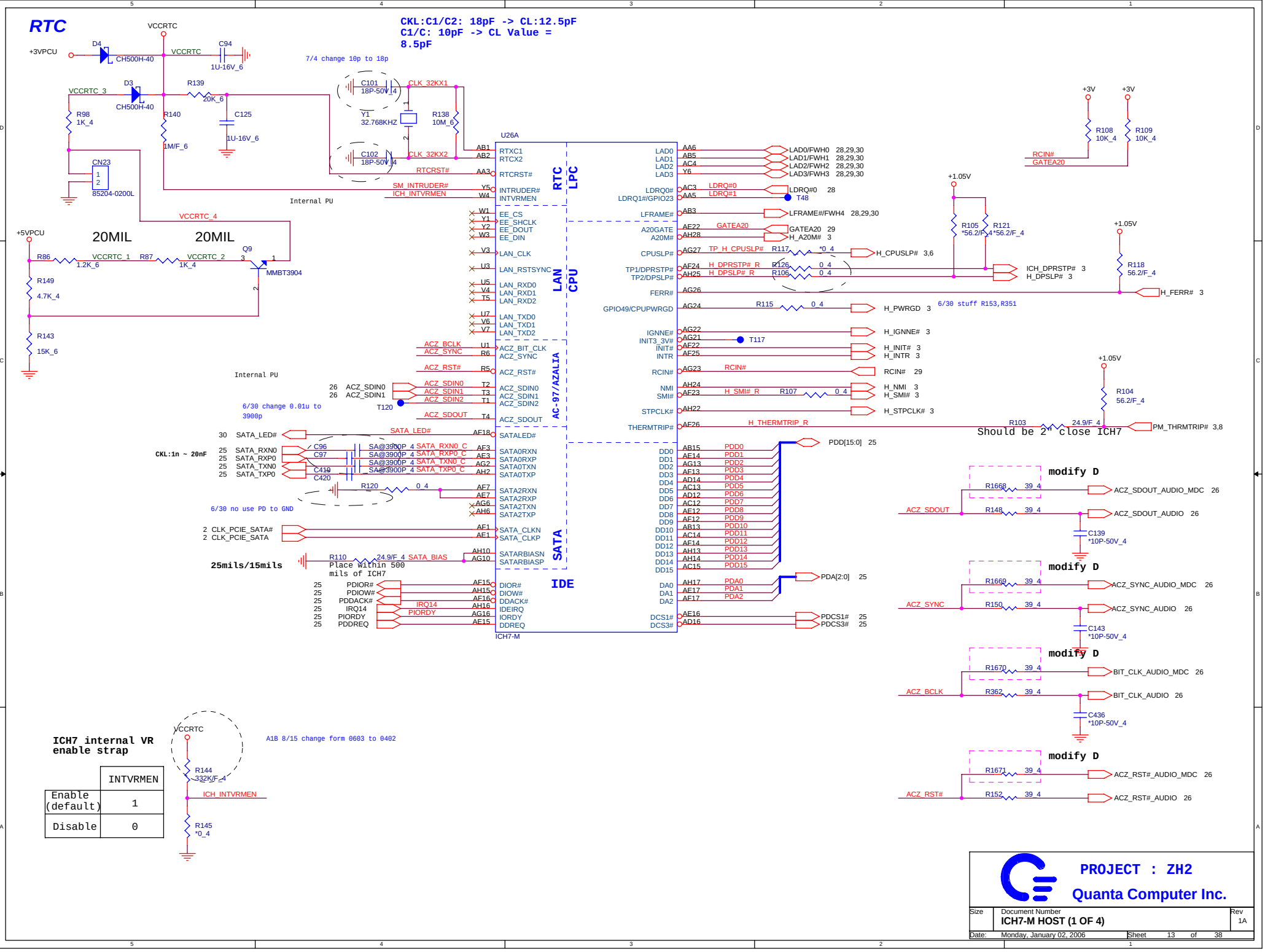
RTC
CKL:C1/C2: 18pF -> CL:12.5pF
C1/C: 10pF -> CL Value = 8.5pF
7/4 change 10p to 18p
VCCRTC
+3VPCU
D4
CH500H-40
C94
1U-16V_6
D3
CH500H-40
VCCRTC_3
R139
20K_6
R98
1K_4
R140
1M/F_6
C125
1U-16V_6
C101
18P-50V_4
C102
18P-50V_4
Y1
32.768KHZ
R138
10M_6
CLK_32KX1
CLK_32KX2
CN23
85204-0200L
RTCRST#
SM_INTRUDER#
ICH_INTVRMEN
Internal PU
VCCRTC_4
+5VPCU
20MIL
20MIL
R86
1.2K_6
VCCRTC_1
R87
1K_4
VCCRTC_2
Q9
MMBT3904
R149
4.7K_4
R143
15K_6
U26A
RTC
LPC
LAN
CPU
AC-97/AZALIA
SATA
IDE
ICH7-M
RTXC1
RTXC2
RTCRST#
INTRUDER#
INTVRMEN
EE_CS
EE_SHCLK
EE_DOUT
EE_DIN
LAN_CLK
LAN_RSTSYNC
LAN_RXD0
LAN_RXD1
LAN_RXD2
LAN_TXD0
LAN_TXD1
LAN_TXD2
ACZ_BCLK
ACZ_SYNC
ACZ_RST#
ACZ_SDIN0
ACZ_SDIN1
ACZ_SDIN2
ACZ_SDOUT
SATALED#
SATA0RXN
SATA0RXP
SATA0TXN
SATA0TXP
SATA2RXN
SATA2RXP
SATA2TXN
SATA2TXP
SATA_CLKN
SATA_CLKP
SATARBIASN
SATARBIASP
DIOR#
DIOW#
DDACK#
IDEIRQ
IORDY
DDREQ
LAD0
LAD1
LAD2
LAD3
LDRQ0#
LDRQ1#/GPIO23
LFRAME#
A20GATE
A20M#
CPUSLP#
TP1/DPRSTP#
TP2/DPSLP#
FERR#
GPIO49/CPUPWRGD
IGNNE#
INIT3_3V#
INIT#
INTR
RCIN#
NMI
SMI#
STPCLK#
THERMTRIP#
DD0
DD1
DD2
DD3
DD4
DD5
DD6
DD7
DD8
DD9
DD10
DD11
DD12
DD13
DD14
DD15
DA0
DA1
DA2
DCS1#
DCS3#
LAD0/FWH0 28,29,30
LAD1/FWH1 28,29,30
LAD2/FWH2 28,29,30
LAD3/FWH3 28,29,30
LDRQ#0 28
T48
LFRAME#/FWH4 28,29,30
GATEA20 29
H_A20M# 3
H_CPUSLP# 3,6
ICH_DPRSTP# 3
H_DPSLP# 3
H_FERR# 3
6/30 stuff R153,R351
H_PWRGD 3
H_IGNNE# 3
T117
H_INIT# 3
H_INTR 3
RCIN# 29
H_NMI 3
H_SMI# 3
H_STPCLK# 3
H_THERMTRIP_R
R103
24.9/F_4
Should be 2" close ICH7
PM_THRMTRIP# 3,8
PDD[15:0] 25
PDA[2:0] 25
PDCS1# 25
PDCS3# 25
+3V
R108
10K_4
R109
10K_4
RCIN#
GATEA20
+1.05V
R105
*56.2/F_4
R121
*56.2/F_4
R118
56.2/F_4
R104
56.2/F_4
6/30 change 0.01u to 3900p
6/30 no use PD to GND
CKL:1n ~ 20nF
26 ACZ_SDIN0
26 ACZ_SDIN1
T120
30 SATA_LED#
25 SATA_RXN0
25 SATA_RXP0
25 SATA_TXN0
25 SATA_TXP0
C96
C97
C419
C420
SA@3900P_4
SATA_RXN0_C
SATA_RXP0_C
SATA_TXN0_C
SATA_TXP0_C
R120
0_4
2 CLK_PCIE_SATA#
2 CLK_PCIE_SATA
25mils/15mils
R110
24.9/F_4
SATA_BIAS
Place within 500 mils of ICH7
25 PDIOR#
25 PDIOW#
25 PDDACK#
25 IRQ14
25 PIORDY
25 PDDREQ
IRQ14
PIORDY
modify D
R1668
39_4
ACZ_SDOUT_AUDIO_MDC 26
ACZ_SDOUT
R148
39_4
ACZ_SDOUT_AUDIO 26
C139
*10P-50V_4
R1669
ACZ_SYNC_AUDIO_MDC 26
ACZ_SYNC
R150
ACZ_SYNC_AUDIO 26
C143
*10P-50V_4
R1670
BIT_CLK_AUDIO_MDC 26
ACZ_BCLK
R362
BIT_CLK_AUDIO 26
C436
*10P-50V_4
R1671
ACZ_RST#_AUDIO_MDC 26
ACZ_RST#
R152
ACZ_RST#_AUDIO 26
ICH7 internal VR enable strap
INTVRMEN
Enable (default) 1
Disable 0
VCCRTC
R144
332K/F_4
ICH_INTVRMEN
R145
*0_4
A1B 8/15 change form 0603 to 0402
PROJECT : ZH2
Quanta Computer Inc.
Size
Document Number
ICH7-M HOST (1 OF 4)
Rev
1A
Date: Monday, January 02, 2006
Sheet 13 of 38

modify C

MINI CARD PCI-E

5789M

EZ4

EZ4

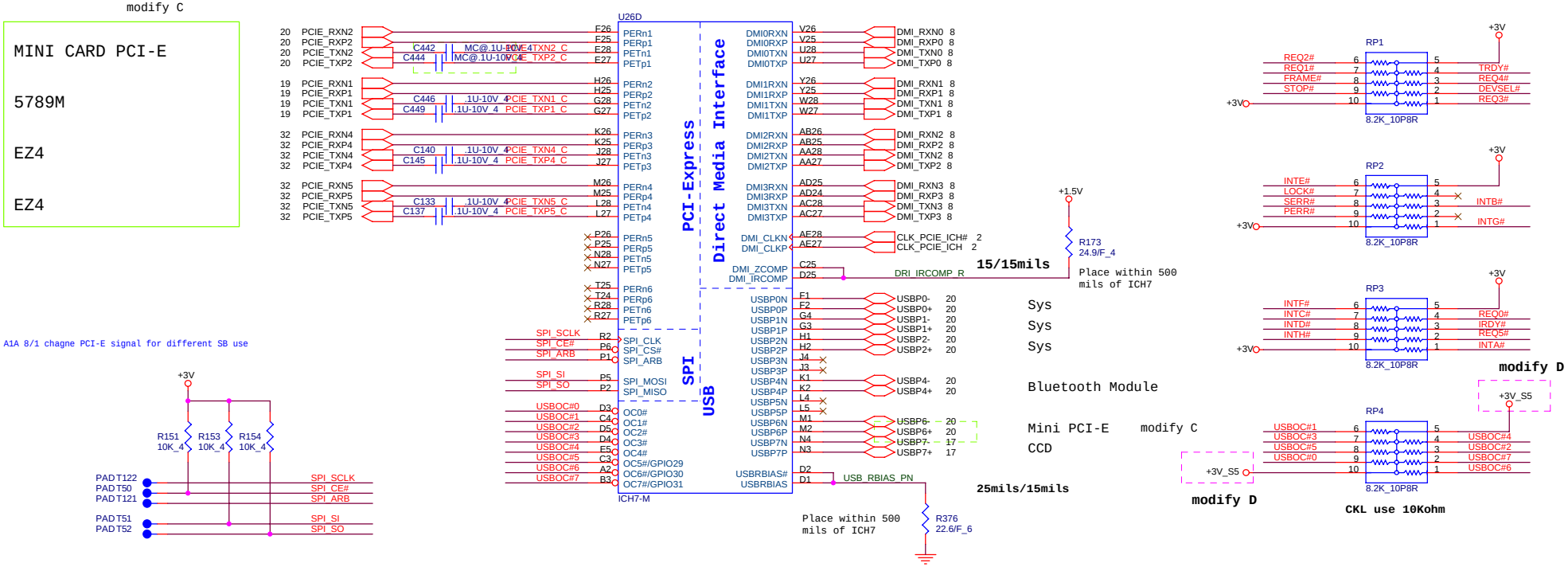

A1A 8/1 chagne PCI-E signal for different SB use

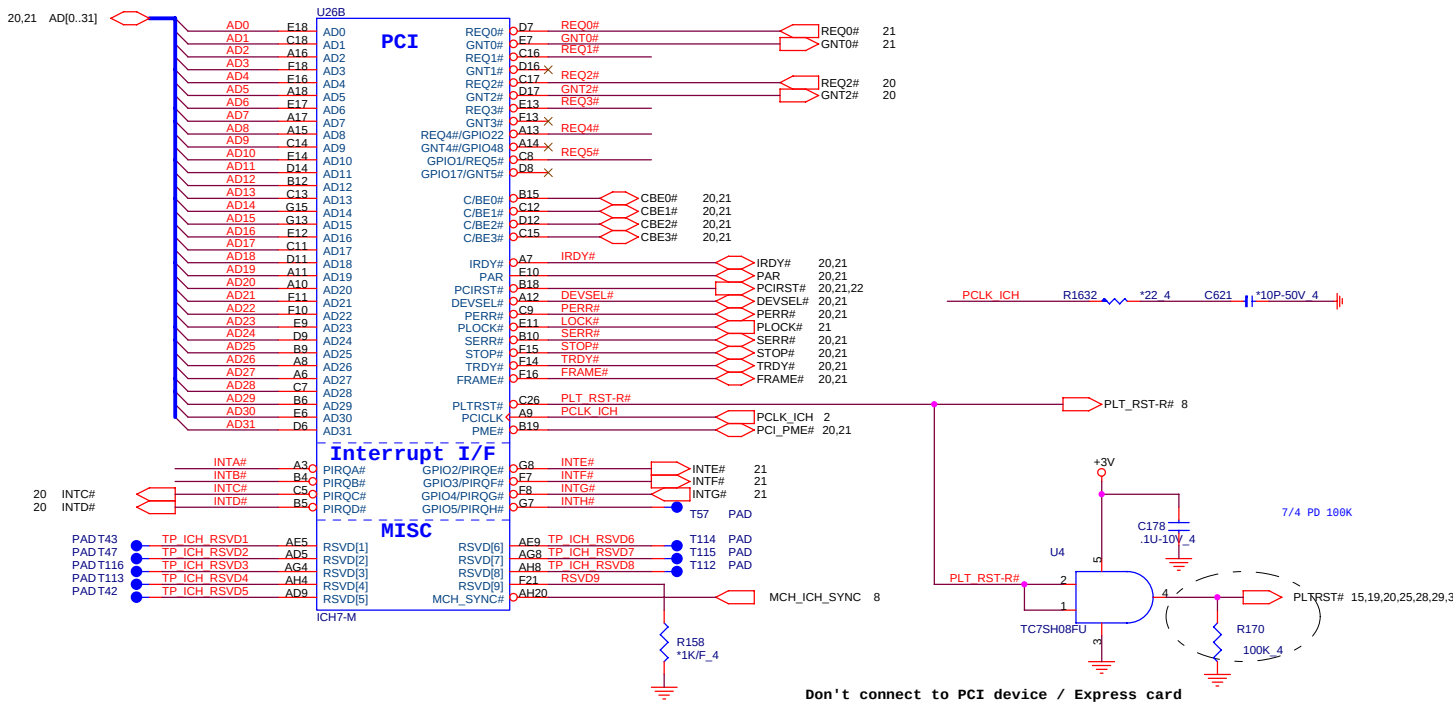

ICH7 Boot BIOS select

	STRAP	GNT5# R1	GNT4# R2
LPC (default)	11	UNSTUFF	UNSTUFF
PCI	10	UNSTUFF	STUFF
SPI	01	STUFF	UNSTUFF

PCI DEVICE	IDSEL#	REQ# / GNT#	Interrupts
PCI7411	AD25	REQ0# / GNT0#	INT E/F/G#

PROJECT : ZH2

Quanta Computer Inc.

Size	Document Number	Rev
	ICH7-M PCI E (2 OF 4)	1A

Date: Monday, January 02, 2006 Sheet 14 of 38

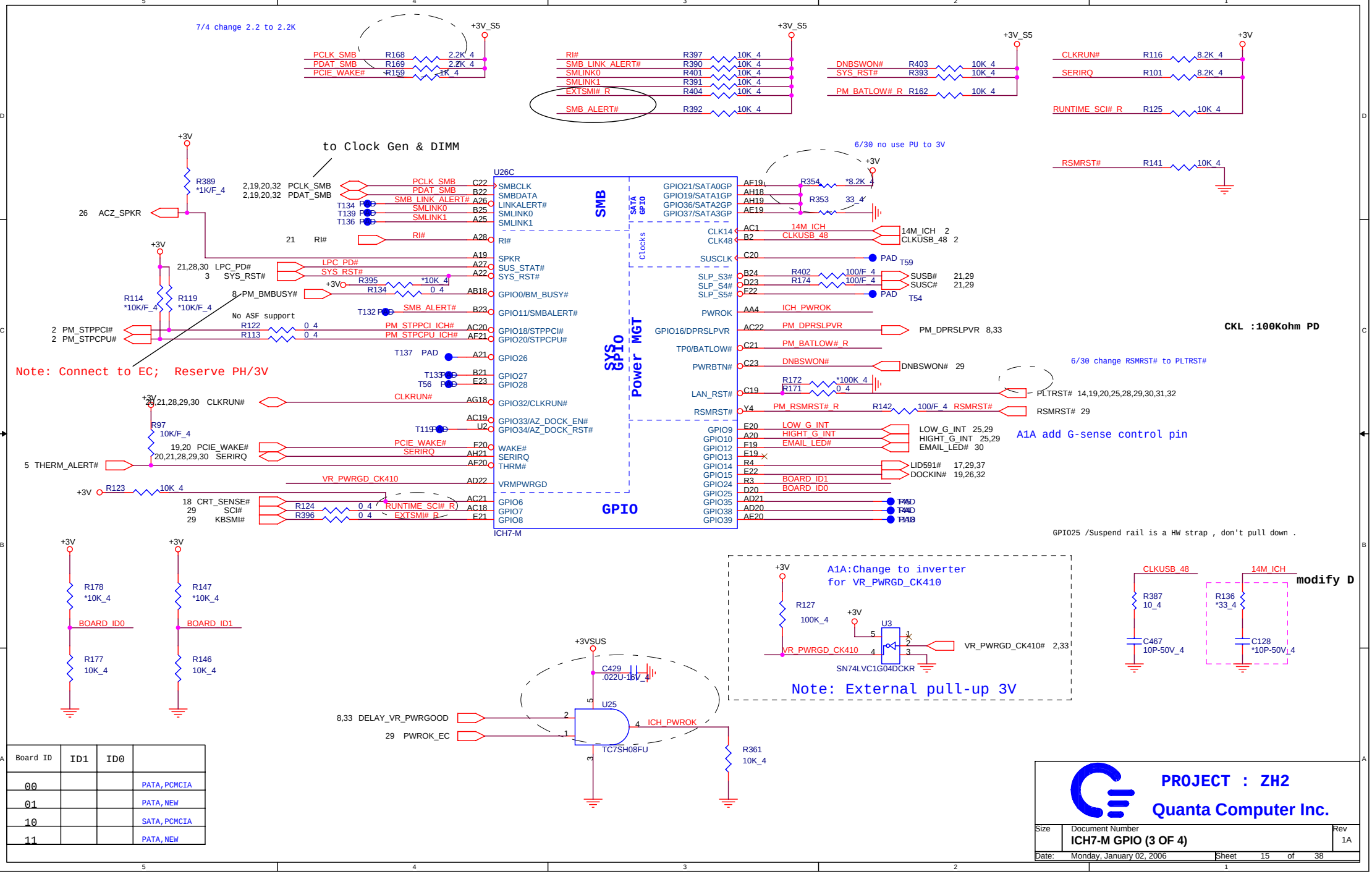

Board ID	ID1	ID0	
00			PATA,PCMCIA
01			PATA,NEW
10			SATA,PCMCIA
11			PATA,NEW

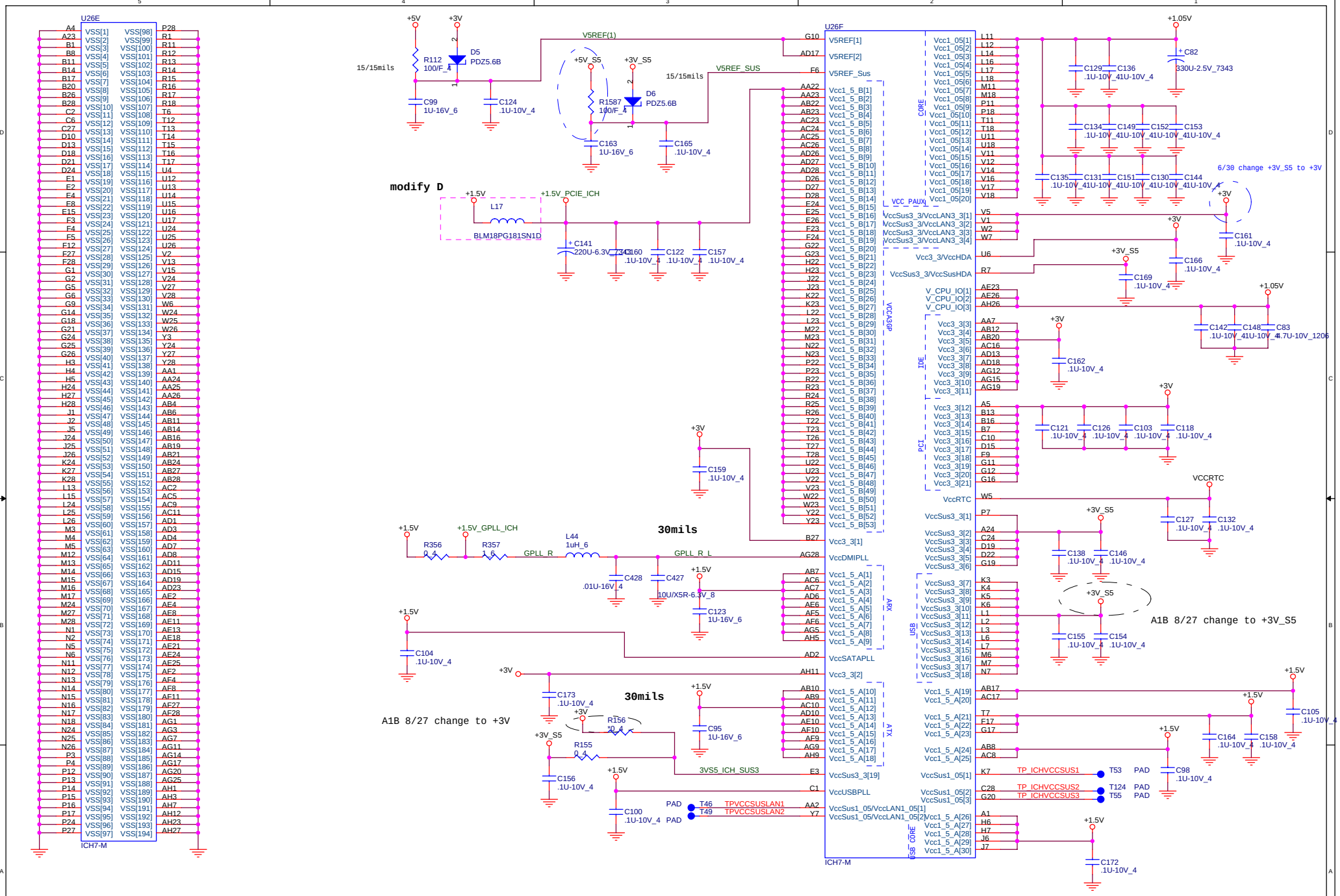

PROJECT : ZH2

Quanta Computer Inc.

Size	Document Number	Rev
	ICH7-M POWER (4 OF 4)	1A

Date: Monday, January 02, 2006 Sheet 16 of 38

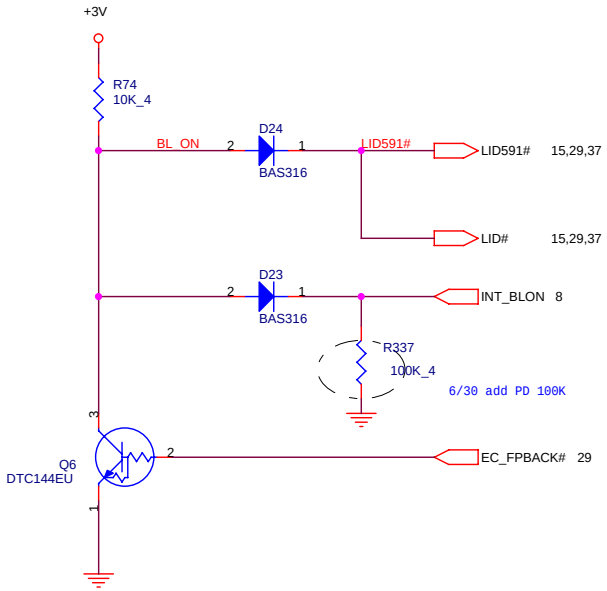

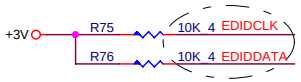

6/30 PU +3V to EDIDCLK & EDIDDATA

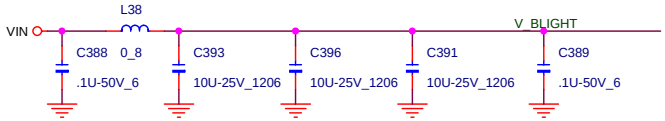

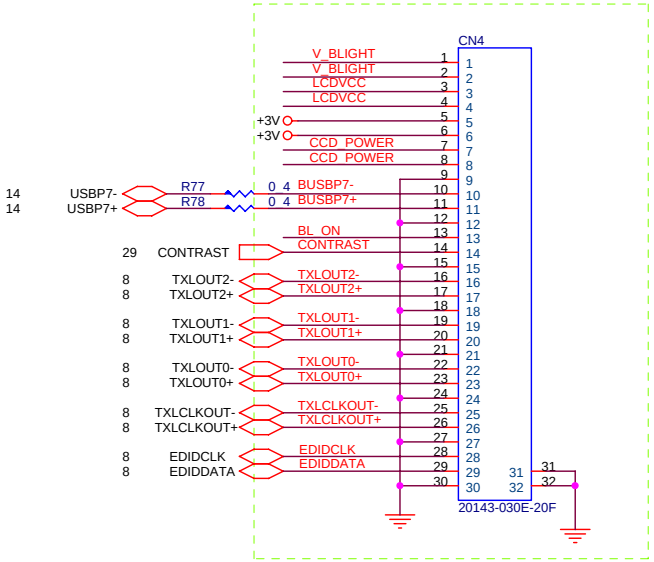

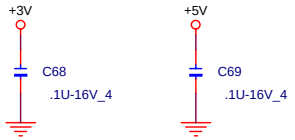

CAMERA MODULE CONNECTOR

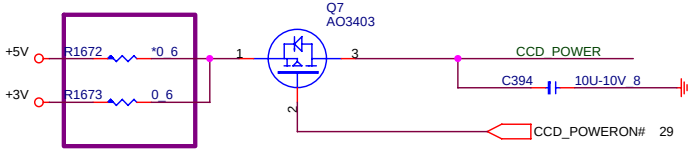

modify E:

TRACE 80MIL

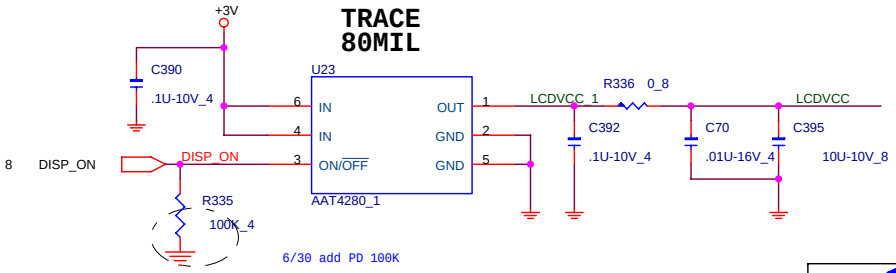

PROJECT : ZH2

Quanta Computer Inc.

Size	Document Number	Rev
	LVDS CONNECTOR	1A
Date: Monday, January 02, 2006	Sheet 17 of 38	

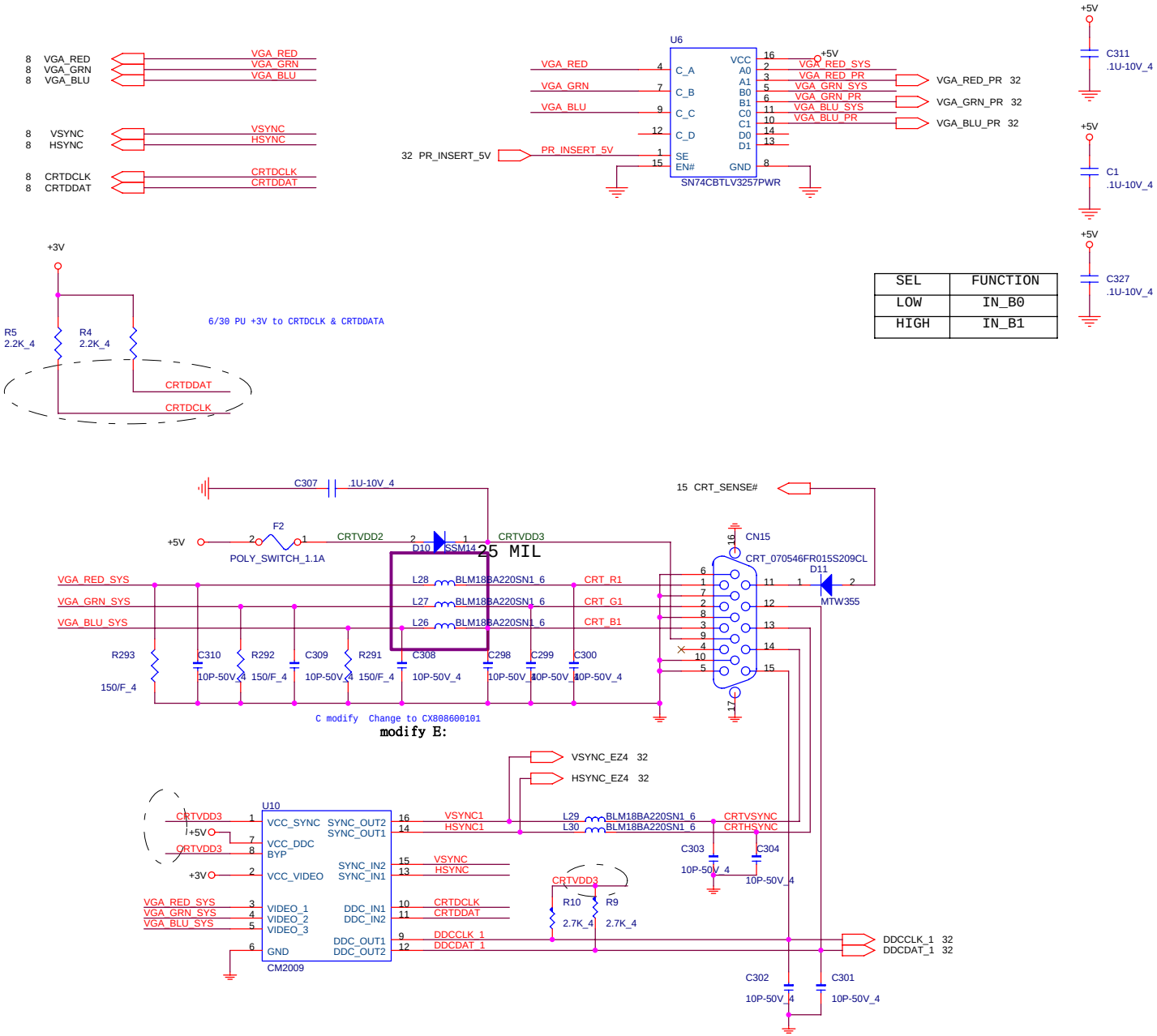

SEL	FUNCTION
LOW	IN_B0
HIGH	IN_B1

PROJECT : ZH2

Quanta Computer Inc.

Size	Document Number	Rev
	CRT-PORT	1A

Date: Monday, January 02, 2006 Sheet 18 of 38

G9@ 5789
G7@ 5787

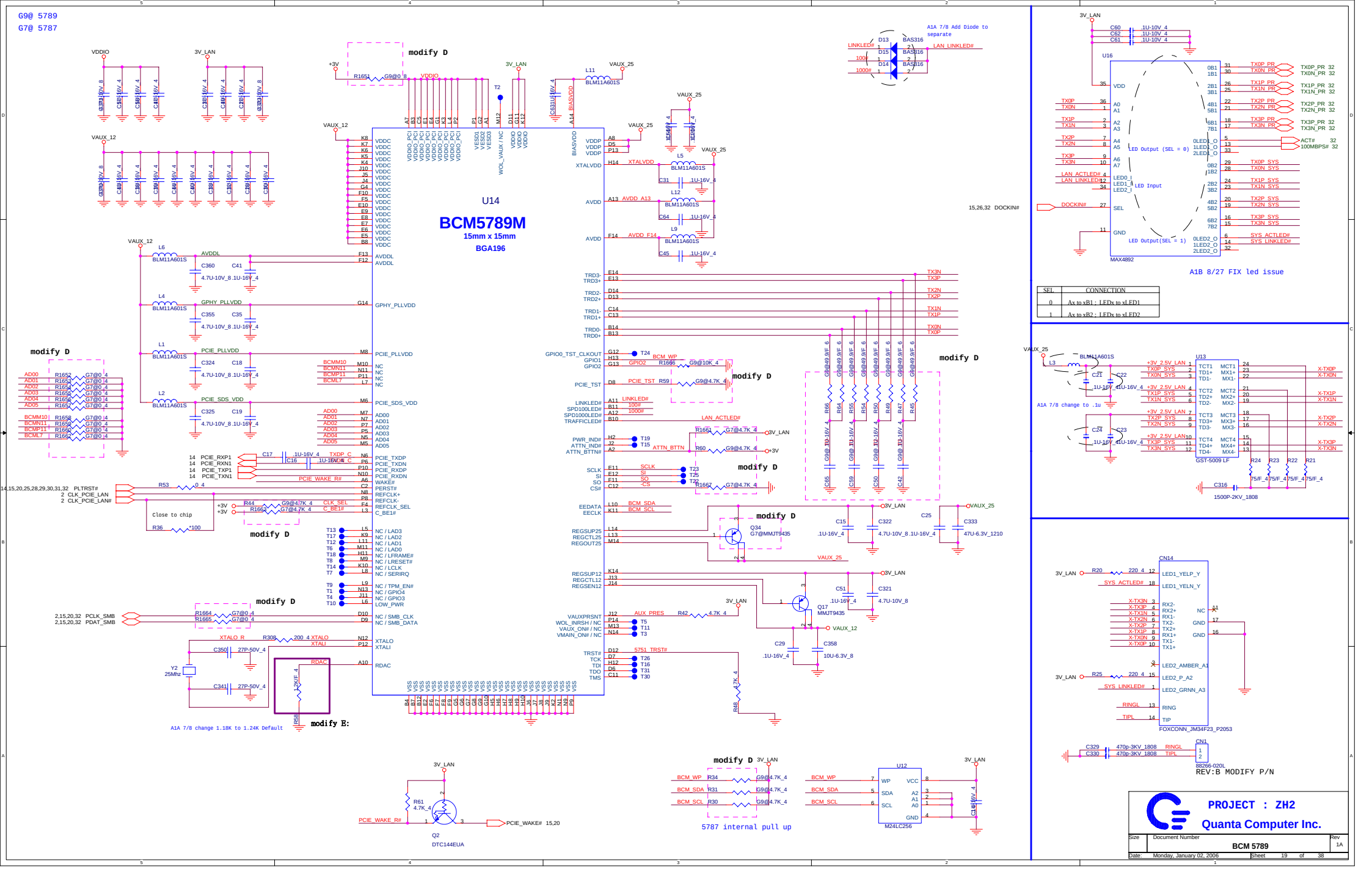

SEL	CONNECTION
0	Ax to xB1 : LEDx to xLED1
1	Ax to xB2 : LEDx to xLED2

MINI-PCI

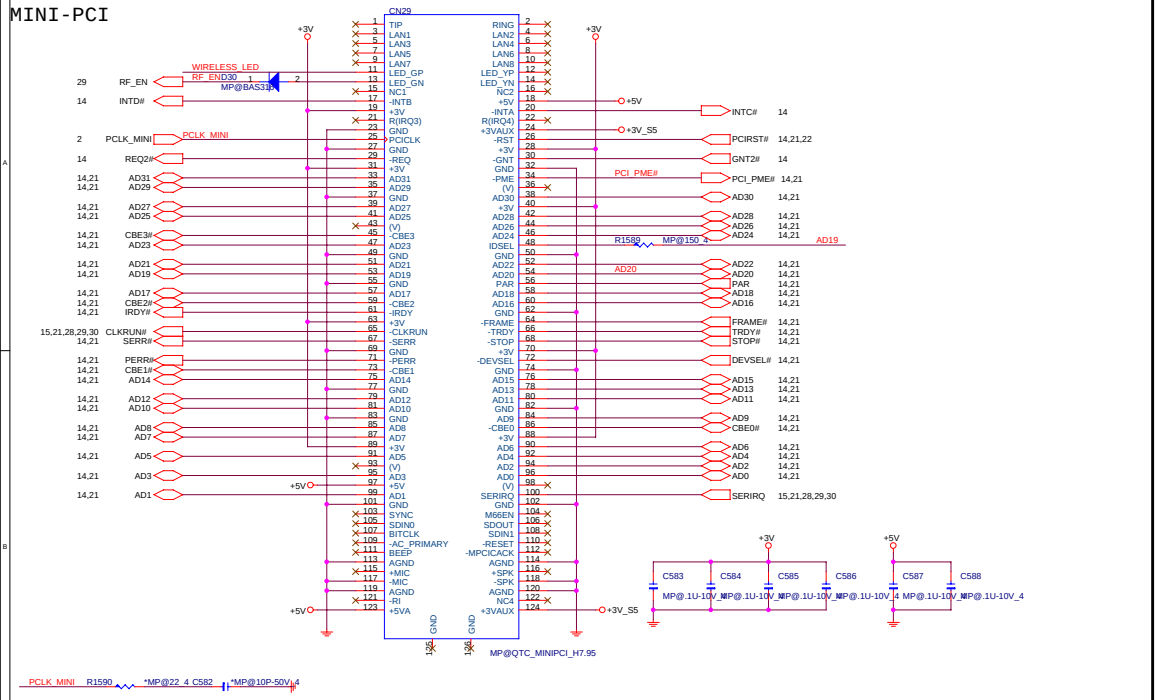

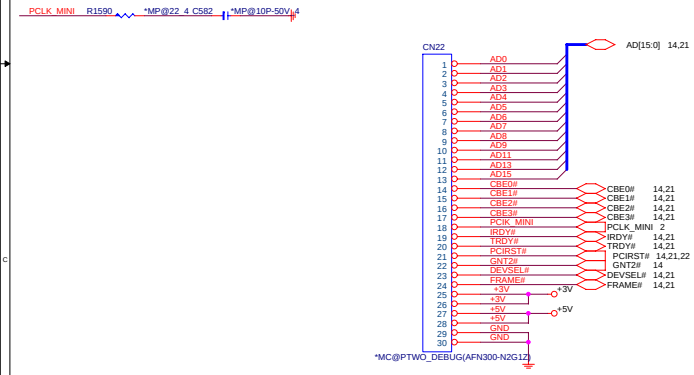

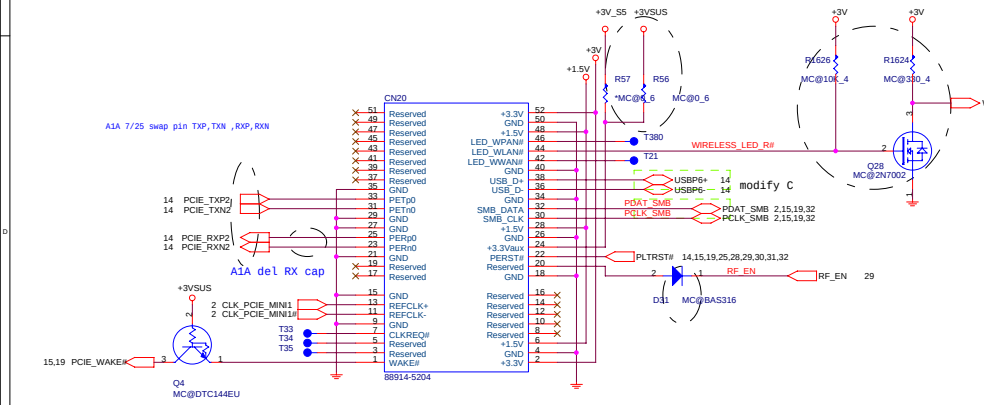

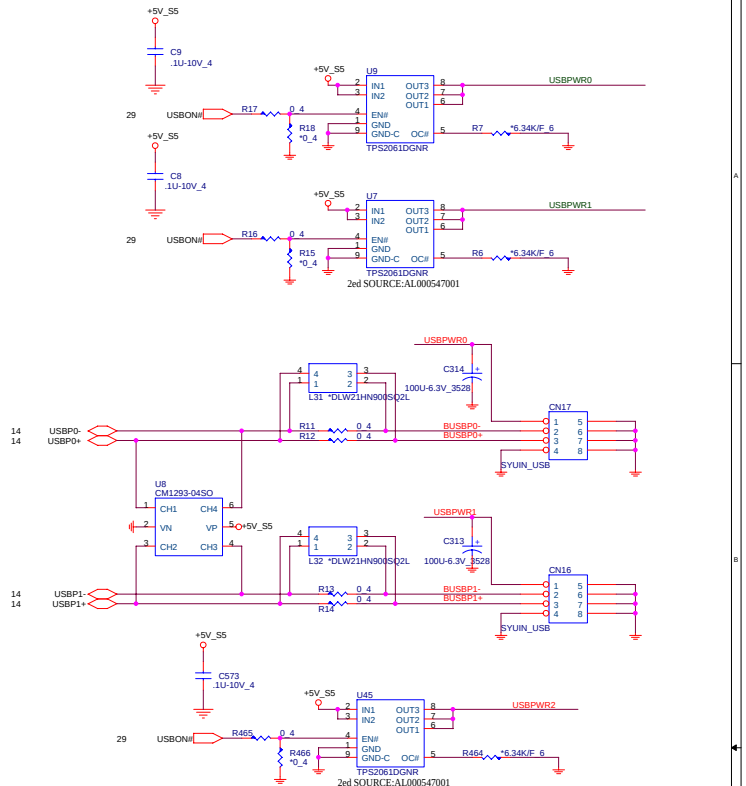

BLUETOOTH MODULE CONNECTOR

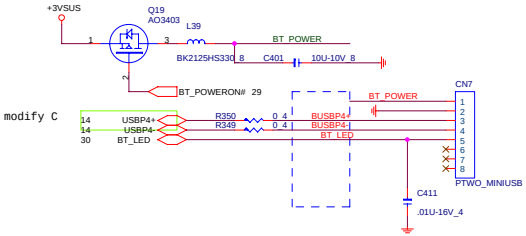

PROJECT : ZH2

Quanta Computer Inc.

Size	Document Number	Rev
	MINI PCI,USB	1A

Date: Monday, January 02, 2006 Sheet 20 of 38

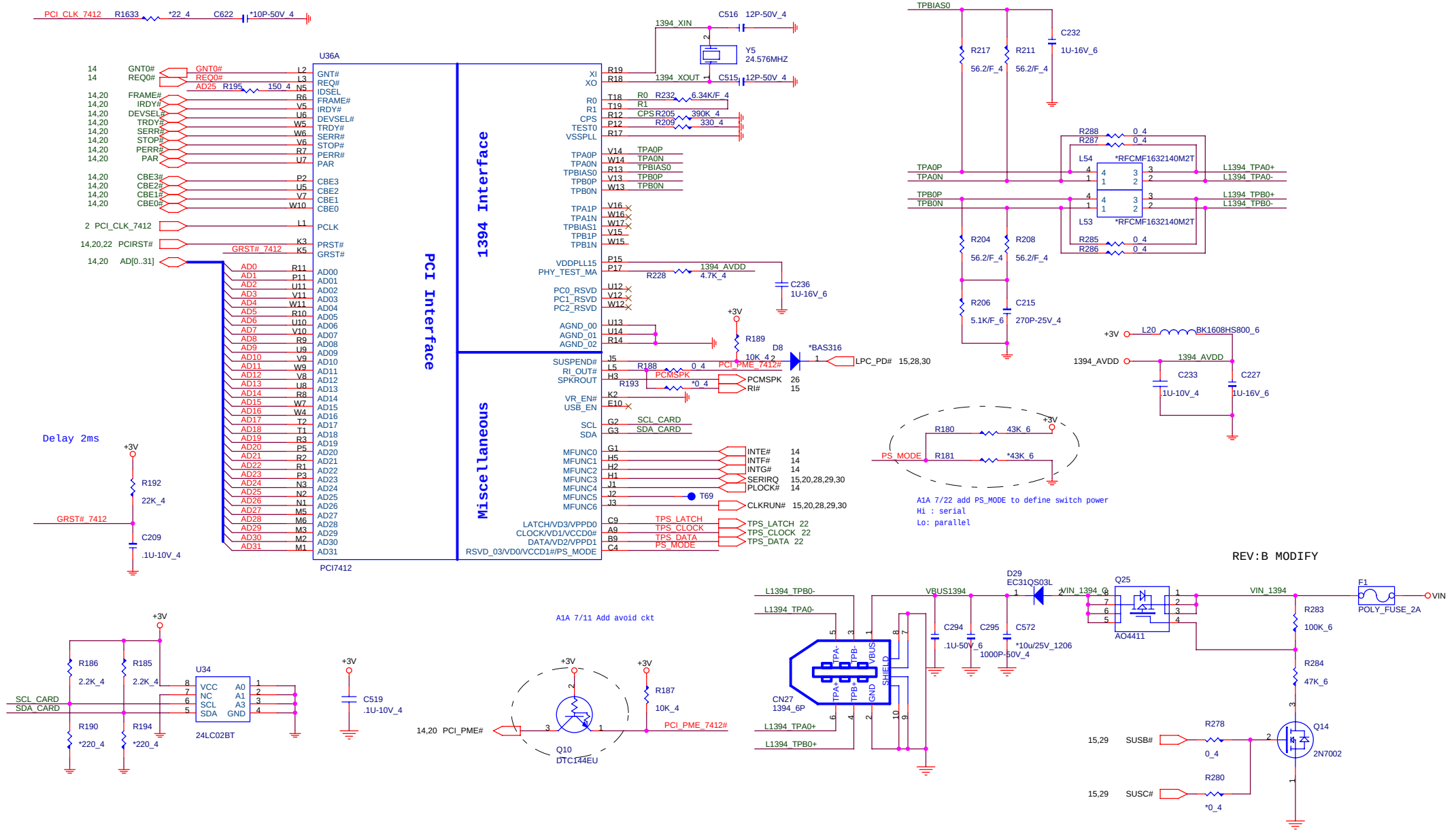

PROJECT : ZH2

Quanta Computer Inc.

Size	Document Number	Rev
	PCI7412-IEEE1394	1A

Date: Monday, January 02, 2006 Sheet 21 of 38

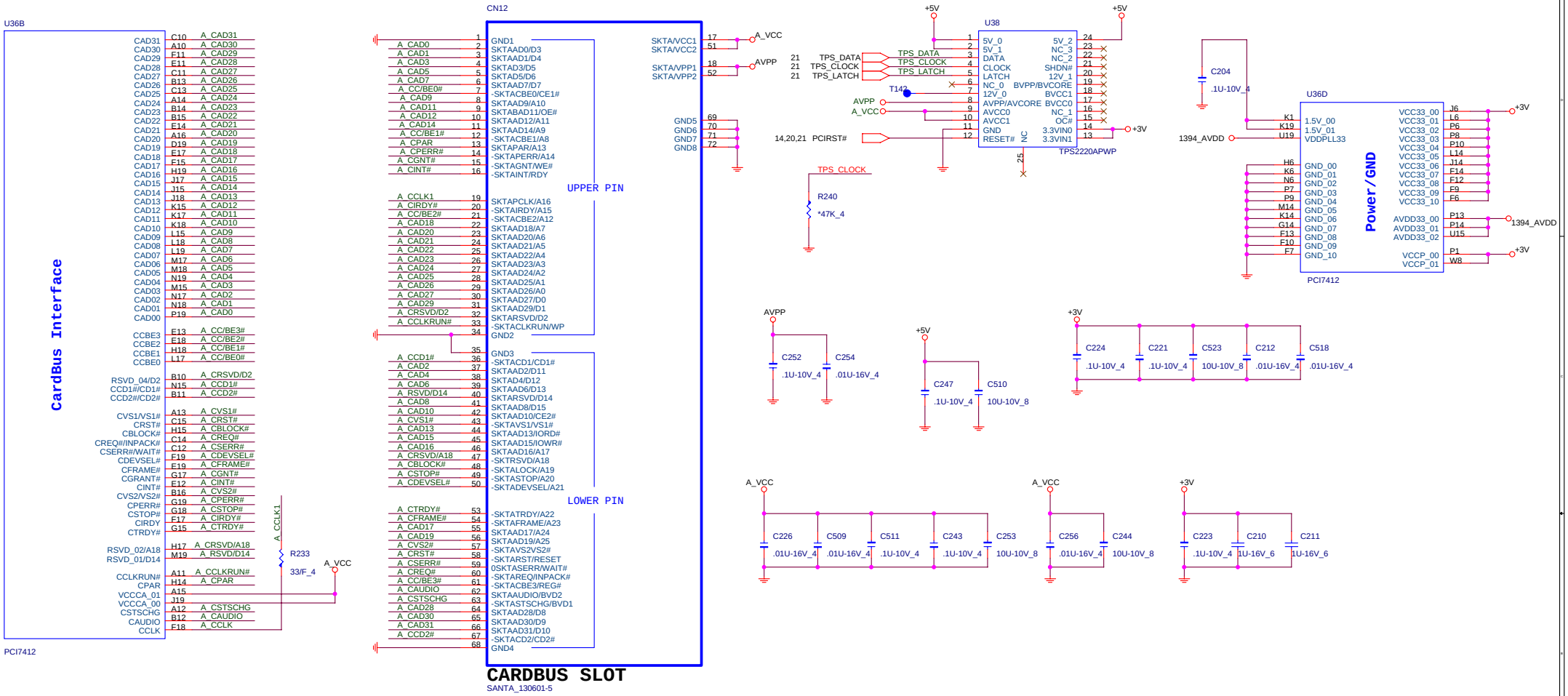

PROJECT : ZH2

Quanta Computer Inc.

Size	Document Number	Rev
	PCI7412-PCMCIA	1A

Date: Monday, January 02, 2006 Sheet 22 of 38

modify F:

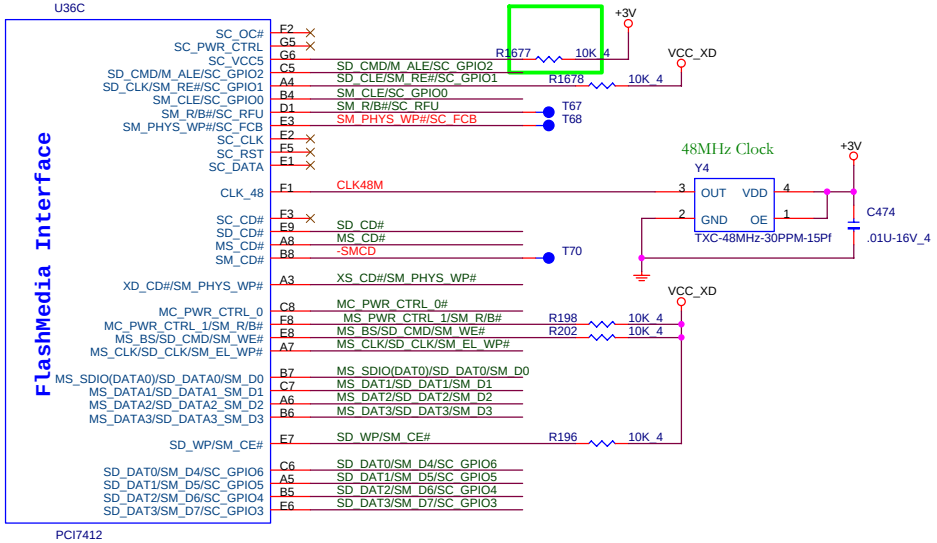

4 IN 1 CARD READER(SD/MMC/MS/MS Pro)

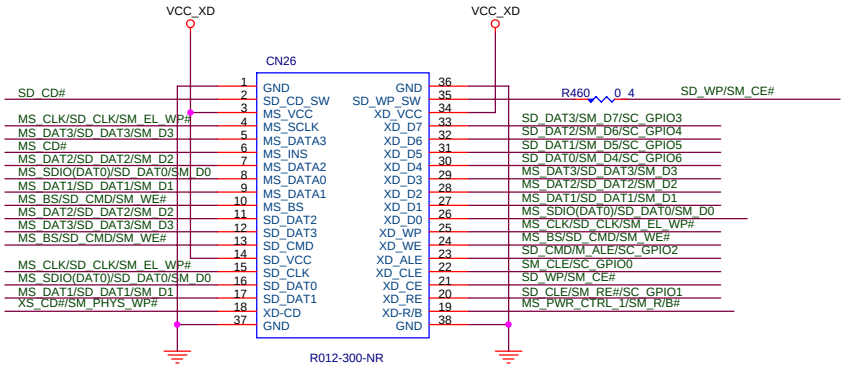

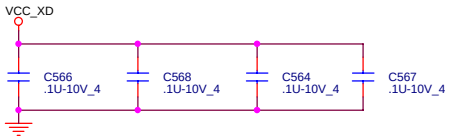

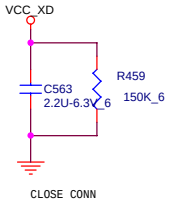

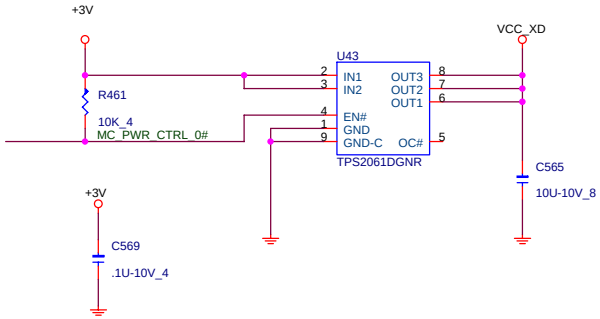

PROJECT : ZH2

Quanta Computer Inc.

Size	Document Number	Rev
	PCI7412-CARD READER	1A

Date: Monday, January 02, 2006 Sheet 23 of 38

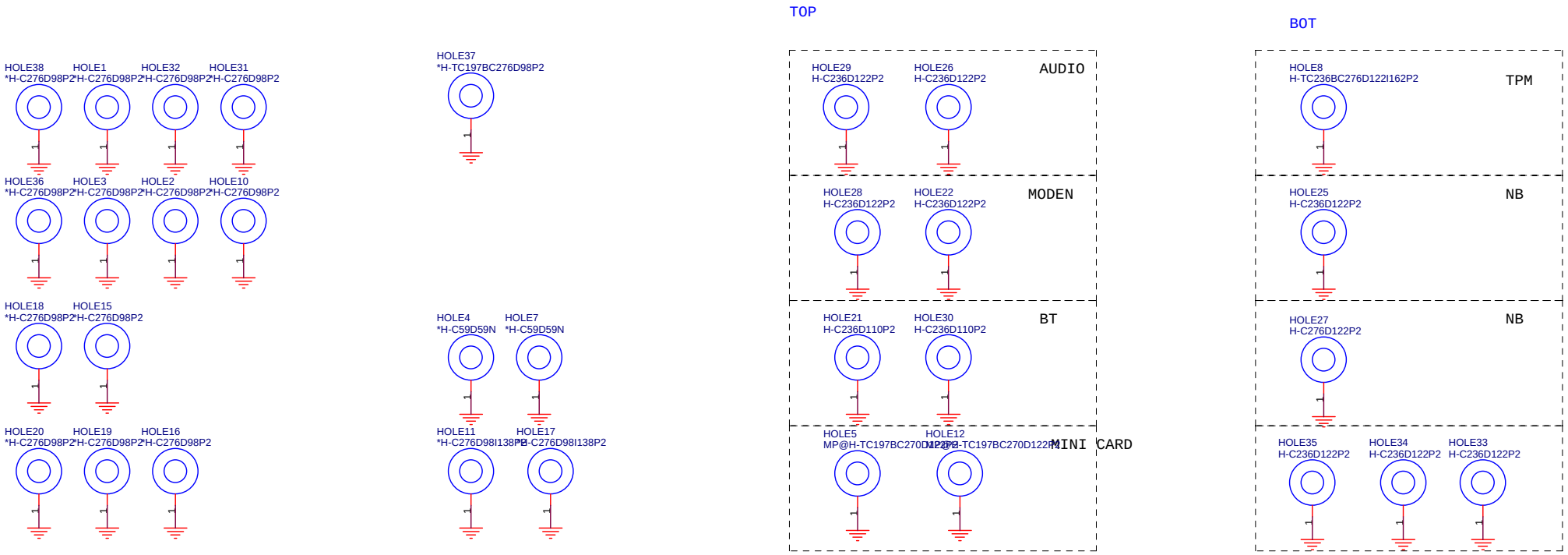

PROJECT : ZH2

Quanta Computer Inc.

Size	Document Number	Rev
	NEW CARD &HOLE	C

Date: Monday, January 02, 2006 Sheet 24 of 38

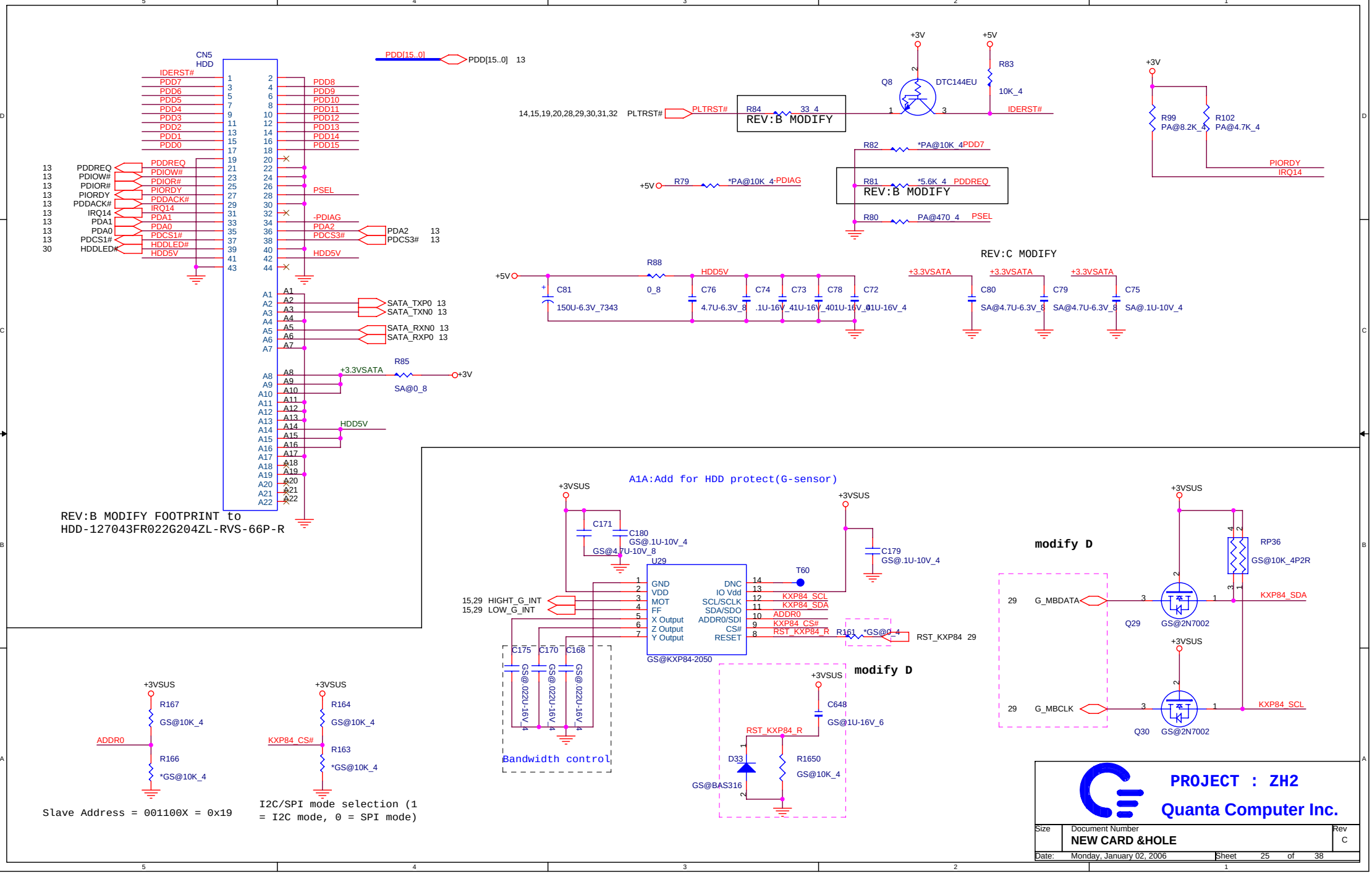
CN5
HDD
IDERST#
PDD7
PDD6
PDD5
PDD4
PDD3
PDD2
PDD1
PDD0
PDD8
PDD9
PDD10
PDD11
PDD12
PDD13
PDD14
PDD15
PDD[15..0]
PDD[15..0] 13
PDDREQ
PDIOW#
PDIOR#
PIORDY
PDDACK#
IRQ14
PDA1
PDA0
PDCS1#
HDDLED#
HDD5V
PSEL
-PDIAG
PDA2
PDCS3#
SATA_TXP0 13
SATA_TXN0 13
SATA_RXN0 13
SATA_RXP0 13
+3.3VSATA
R85
SA@0_8
+3V
REV:B MODIFY FOOTPRINT to
HDD-127043FR022G204ZL-RVS-66P-R
14,15,19,20,28,29,30,31,32 PLTRST#
R84 33_4
REV:B MODIFY
Q8 DTC144EU
R83 10K_4
IDERST#
R82 *PA@10K_4
R79 *PA@10K_4
R81 *5.6K_4
R80 PA@470_4
R99 PA@8.2K_4
R102 PA@4.7K_4
REV:C MODIFY
R88 0_8
C81 150U-6.3V_7343
C76 4.7U-6.3V_8
C74 .1U-16V_4
C73 .1U-16V_4
C78 .01U-16V_4
C72 .01U-16V_4
C80 SA@4.7U-6.3V_8
C79 SA@4.7U-6.3V_8
C75 SA@.1U-10V_4
A1A:Add for HDD protect(G-sensor)
+3VSUS
C171 GS@4.7U-10V_8
C180 GS@.1U-10V_4
C179 GS@.1U-10V_4
U29
GS@KXP84-2050
GND
VDD
MOT
FF
X Output
Z Output
Y Output
DNC
IO Vdd
SCL/SCLK
SDA/SDO
ADDR0/SDI
CS#
RESET
T60
KXP84_SCL
KXP84_SDA
ADDR0
KXP84_CS#
RST_KXP84_R
R161 *GS@0_4
RST_KXP84 29
15,29 HIGHT_G_INT
15,29 LOW_G_INT
C175 GS@.022U-16V_4
C170 GS@.022U-16V_4
C168 GS@.022U-16V_4
Bandwidth control
modify D
C648 GS@1U-16V_6
D33 GS@BAS316
R1650 GS@10K_4
RP36 GS@10K_4P2R
29 G_MBDATA
29 G_MBCLK
Q29 GS@2N7002
Q30 GS@2N7002
R167 GS@10K_4
R166 *GS@10K_4
ADDR0
R164 GS@10K_4
R163 *GS@10K_4
KXP84_CS#
Slave Address = 001100X = 0x19
I2C/SPI mode selection (1
= I2C mode, 0 = SPI mode)
PROJECT : ZH2
Quanta Computer Inc.
Size
Document Number
NEW CARD &HOLE
Rev
C
Date: Monday, January 02, 2006
Sheet 25 of 38

CODEC(ALC883)

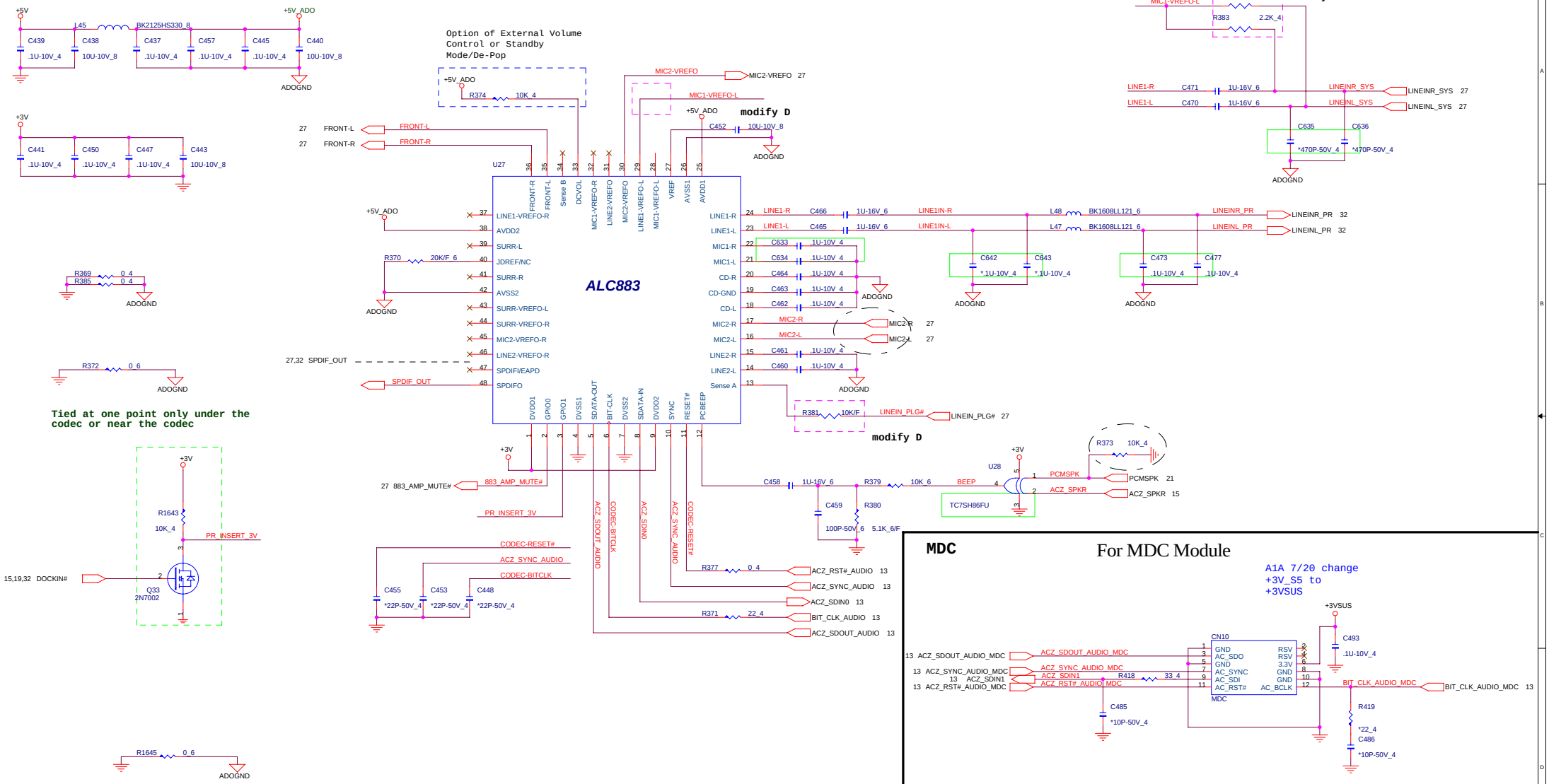

MDC

For MDC Module

A1A 7/20 change
+3V_S5 to
+3VSUS

PROJECT : ZH2

Quanta Computer Inc.

Size	Document Number	Rev
	REALTEK ALC883 & MDC	1A

Date: Monday, January 02, 2006 Sheet 26 of 38

GAIN1	SPKR MODE	HP MODE
0	10.5	3
1	9	0

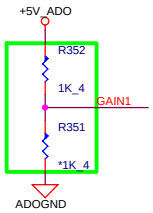

modify F:

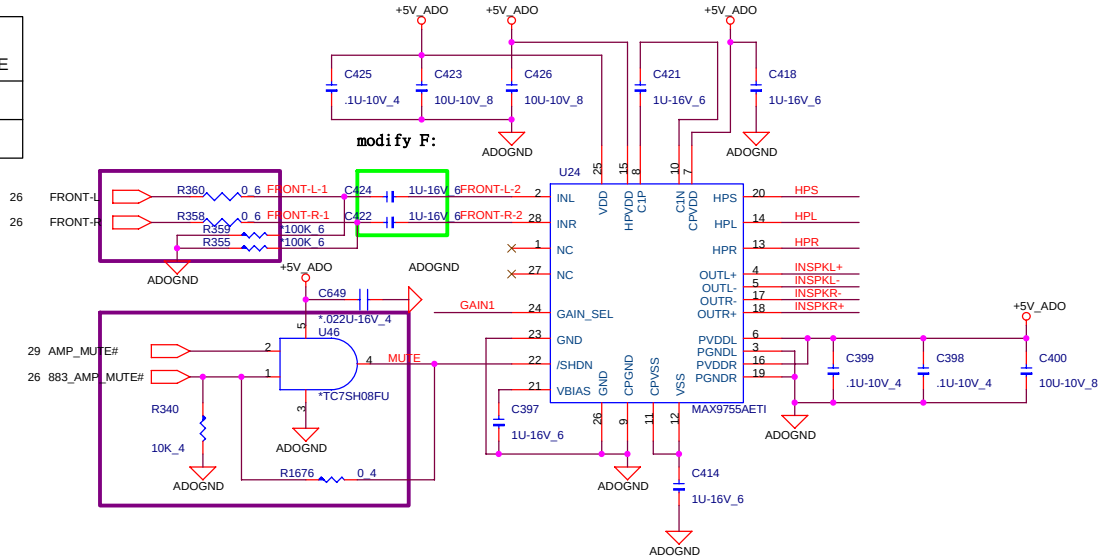

SPKR

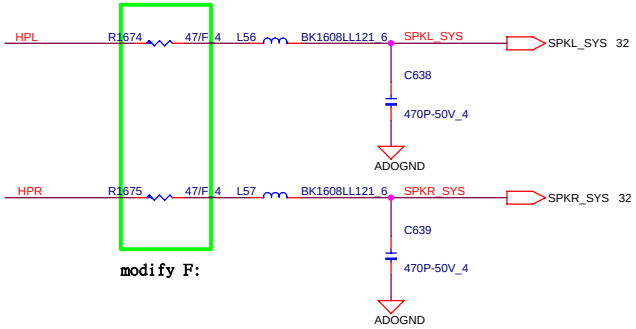

modify F:

MIC

modify D

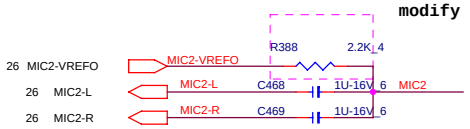

SEL	FUNCTION
LOW	IN_B0
HIGH	IN_B1

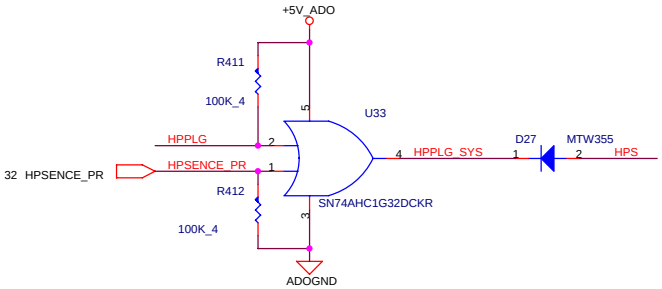

20 MIL

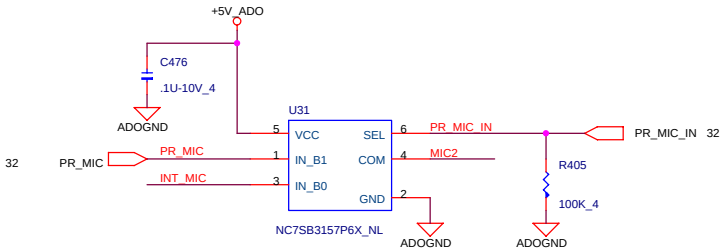

AUDIO BOARD

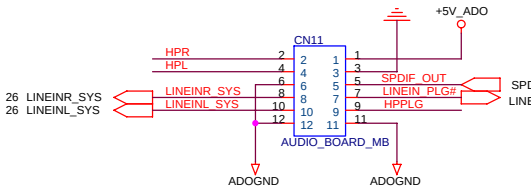

SPEAKER CONNECTOR

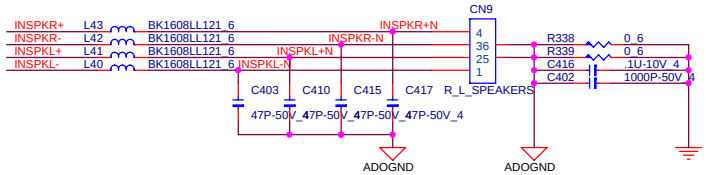

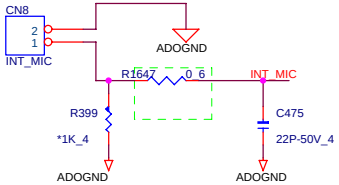

PROJECT : ZH2

Quanta Computer Inc.

Size	Document Number	Rev
	AUDIO AMP(MAX 9755)	1A

Date: Monday, January 02, 2006 Sheet 27 of 38

SIO

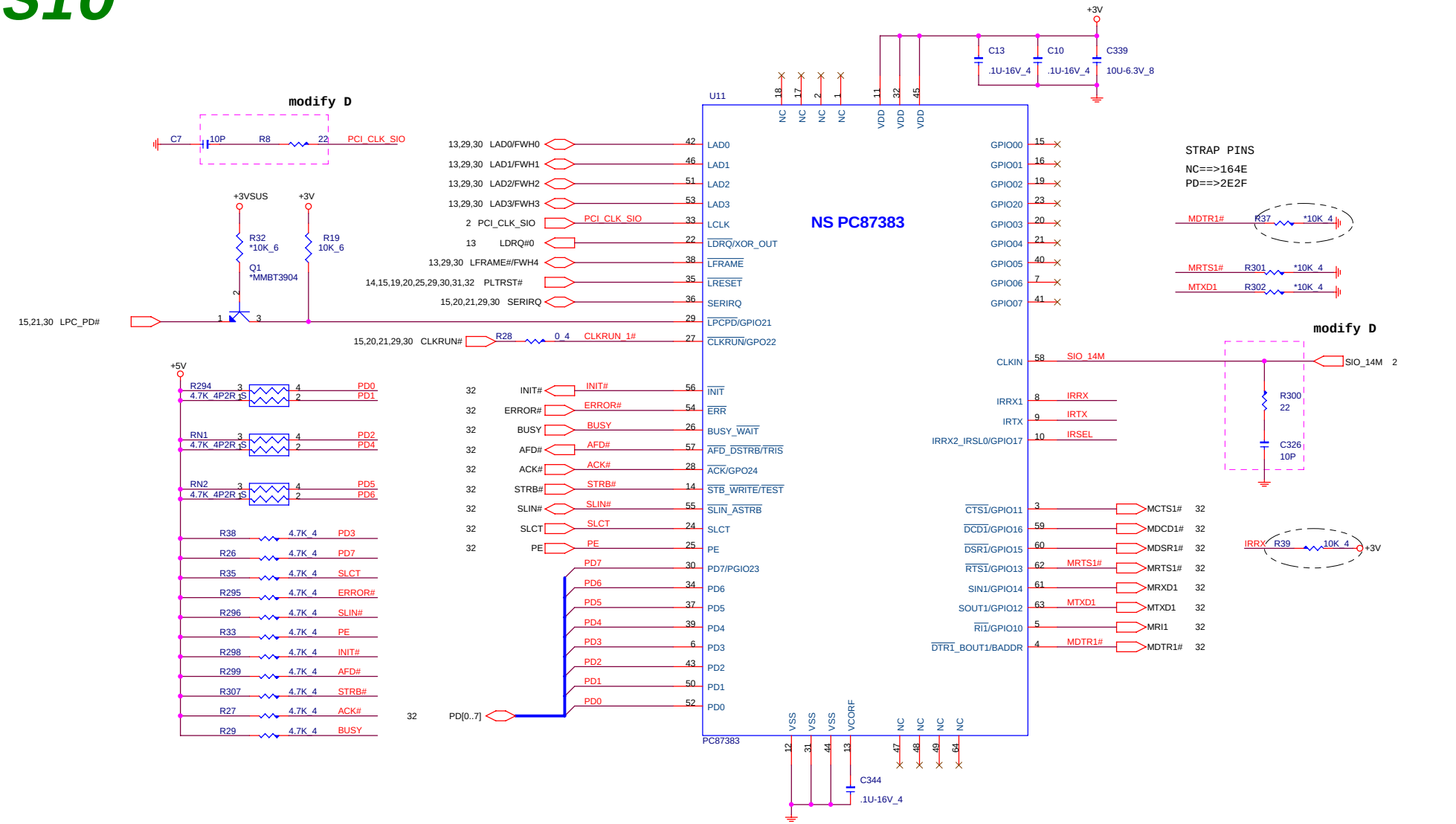

PROJECT : ZH2
Quanta Computer Inc.

Size	Document Number	Rev
Custom	SIO (87383)	E2B
Date: Monday, January 02, 2006	Sheet 28 of 38	

LDRQ#(pin 8) internal is no use

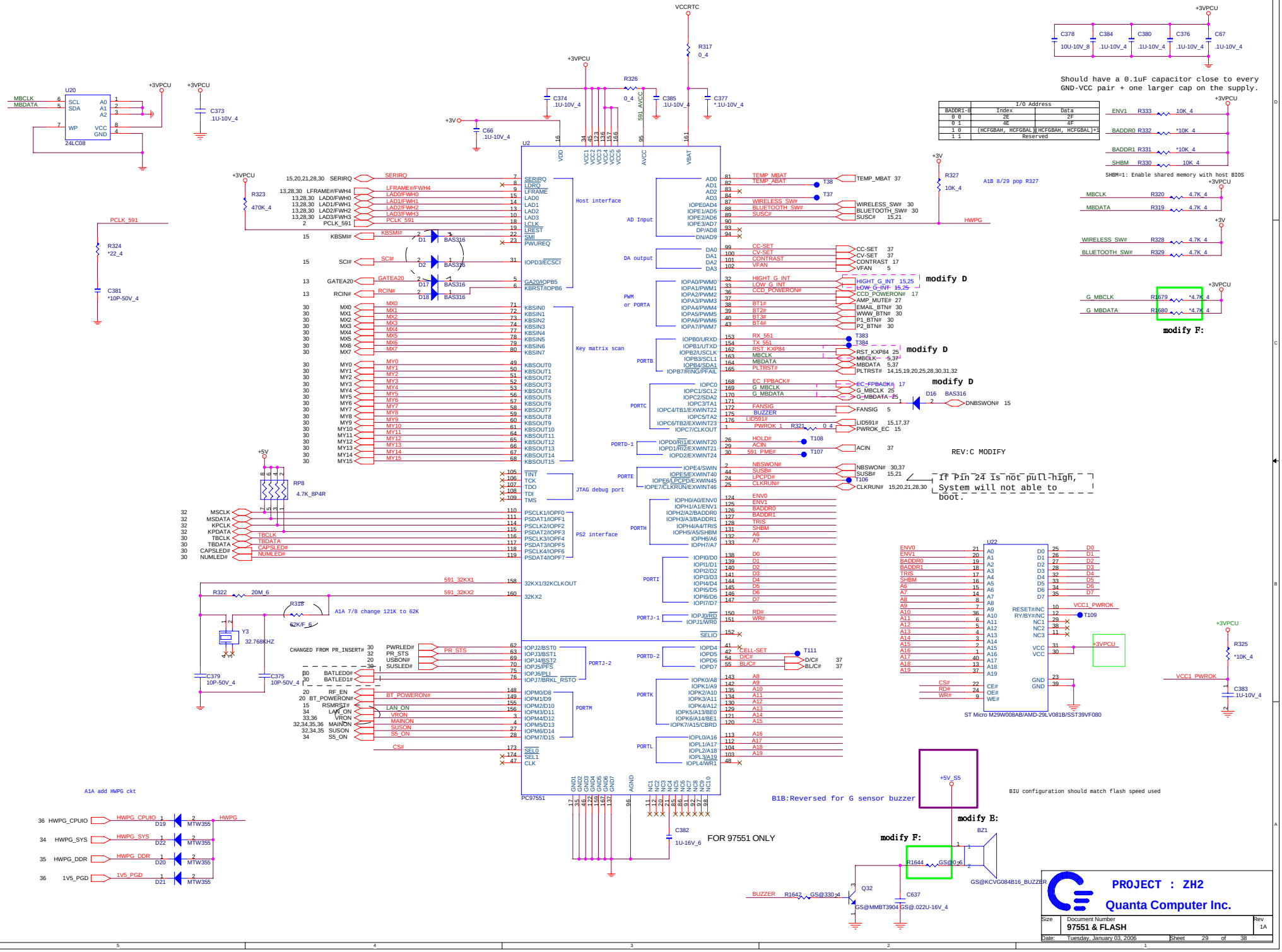

PROJECT : ZH2

Quanta Computer Inc.

Size	Document Number	Rev
	97551 & FLASH	1A

Date: Tuesday, January 03, 2006 Sheet 29 of 38

INT K/B

REVB P/N&FT CHANGE

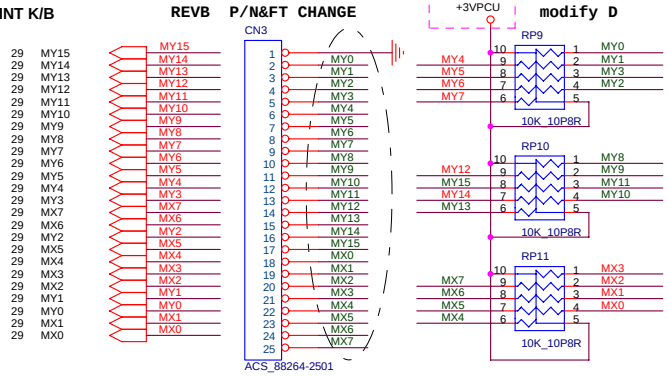

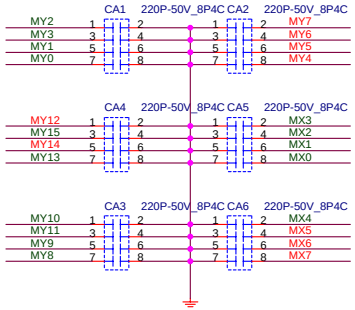

T/P

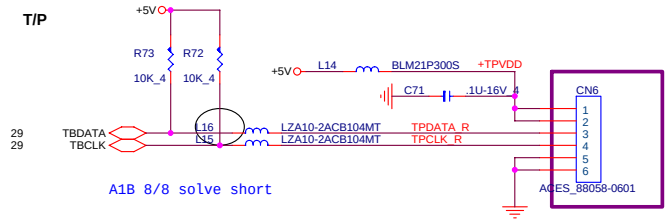

A1B 8/8 solve short

SW BOARD

A1A define keyboard matrix as same as ZH1

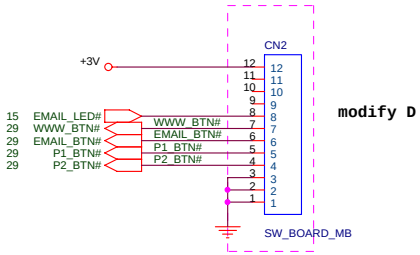

WL/BT

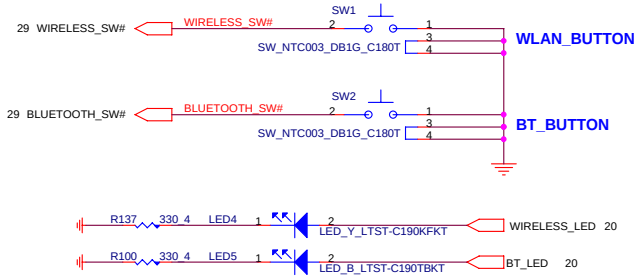

TPM

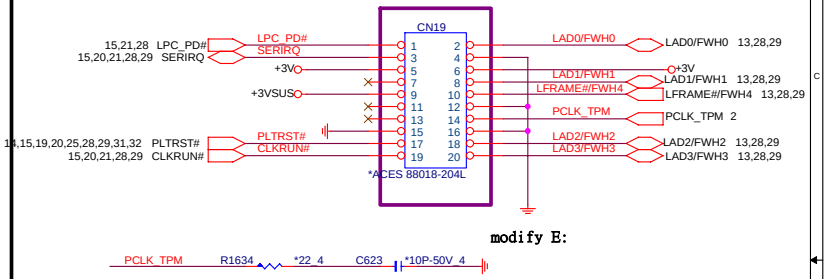

POWER LED/BATT LED

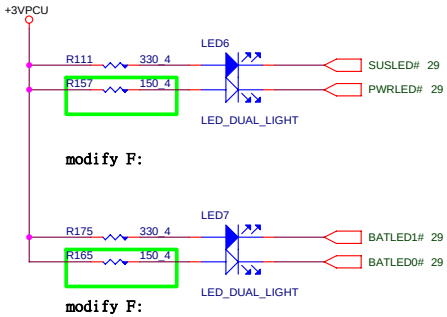

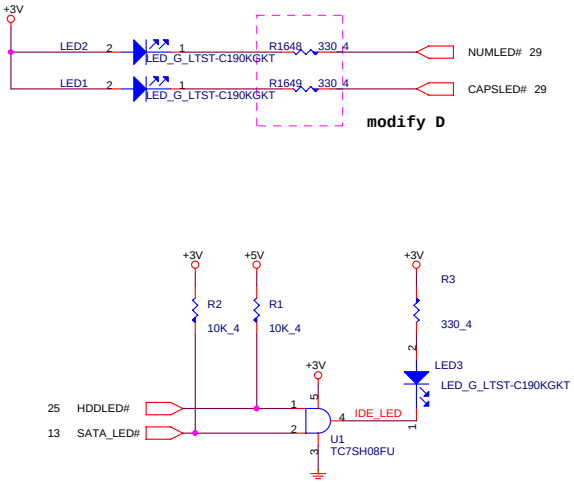

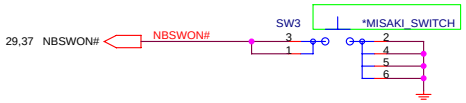

EMI

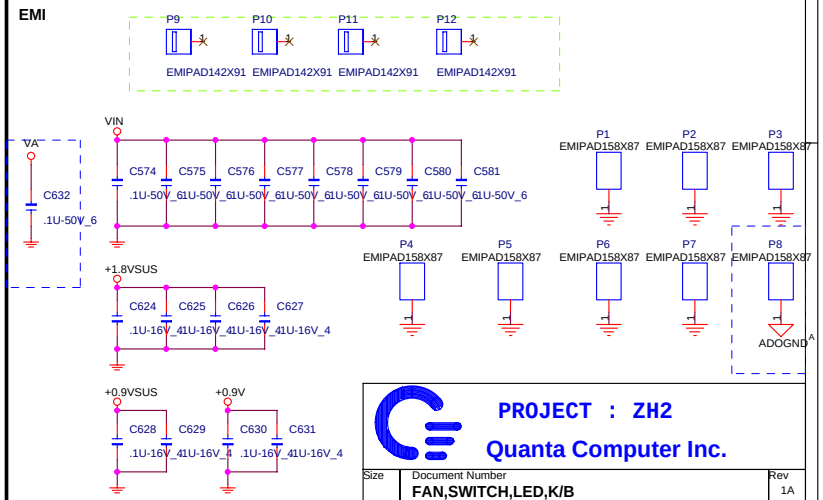

PROJECT : ZH2

Quanta Computer Inc.

Size	Document Number	Rev
	FAN,SWITCH,LED,K/B	1A

Date: Thursday, January 05, 2006 Sheet 30 of 38

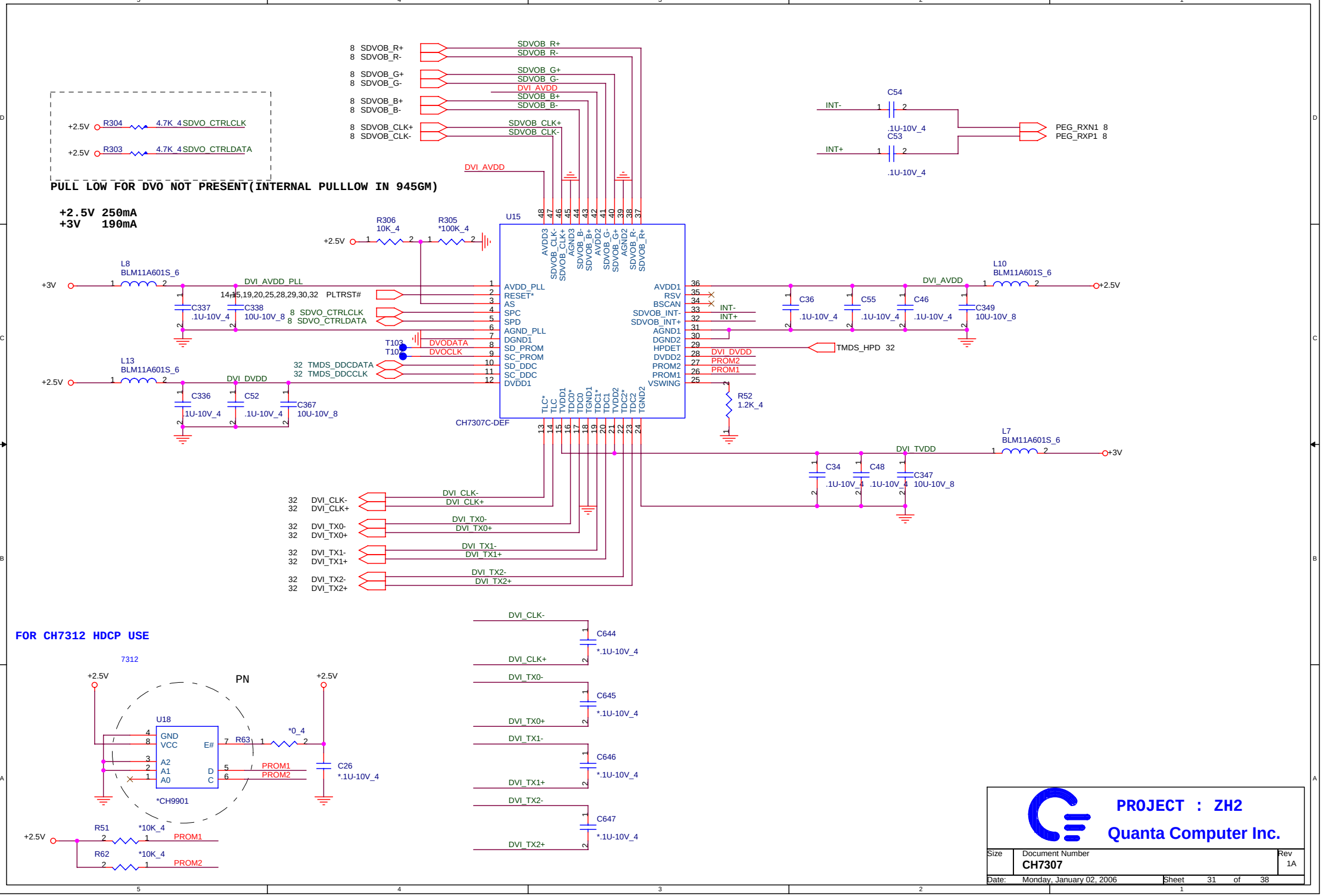
PULL LOW FOR DVO NOT PRESENT(INTERNAL PULLLOW IN 945GM)
+2.5V 250mA
+3V 190mA
R304 4.7K_4 SDVO_CTRLCLK
R303 4.7K_4 SDVO_CTRLDATA
8 SDVOB_R+
8 SDVOB_R-
8 SDVOB_G+
8 SDVOB_G-
8 SDVOB_B+
8 SDVOB_B-
8 SDVOB_CLK+
8 SDVOB_CLK-
DVI_AVDD
U15
CH7307C-DEF
AVDD_PLL
RESET*
AS
SPC
SPD
AGND_PLL
DGND1
SD_PROM
SC_PROM
SD_DDC
SC_DDC
DVDD1
AVDD1
RSV
BSCAN
SDVOB_INT-
SDVOB_INT+
AGND1
DGND2
HPDET
DVDD2
PROM2
PROM1
VSWING
TLC*
TLC
TVDD1
TDC0*
TDC0
TGND1
TDC1*
TDC1
TVDD2
TDC2*
TDC2
TGND2
PLTRST#
DVODATA
DVOCLK
TMDS_DDCDATA
TMDS_DDCCLK
TMDS_HPD 32
DVI_AVDD_PLL
DVI_DVDD
DVI_TVDD
L8 BLM11A601S_6
L13 BLM11A601S_6
L10 BLM11A601S_6
L7 BLM11A601S_6
R306 10K_4
R305 *100K_4
R52 1.2K_4
C337 .1U-10V_4
C338 10U-10V_8
C336 .1U-10V_4
C52 .1U-10V_4
C367 10U-10V_8
C36 .1U-10V_4
C55 .1U-10V_4
C46 .1U-10V_4
C349 10U-10V_8
C34 .1U-10V_4
C48 .1U-10V_4
C347 10U-10V_8
C54 .1U-10V_4
C53 .1U-10V_4
INT-
INT+
PEG_RXN1 8
PEG_RXP1 8
DVI_CLK-
DVI_CLK+
DVI_TX0-
DVI_TX0+
DVI_TX1-
DVI_TX1+
DVI_TX2-
DVI_TX2+
32 DVI_CLK-
32 DVI_CLK+
32 DVI_TX0-
32 DVI_TX0+
32 DVI_TX1-
32 DVI_TX1+
32 DVI_TX2-
32 DVI_TX2+
FOR CH7312 HDCP USE
7312
PN
U18
GND
VCC
E#
A2
A1
A0
D
C
R63 *0_4
PROM1
PROM2
C26 *.1U-10V_4
*CH9901
R51 *10K_4
R62 *10K_4
C644 *.1U-10V_4
C645 *.1U-10V_4
C646 *.1U-10V_4
C647 *.1U-10V_4
PROJECT : ZH2
Quanta Computer Inc.
Size
Document Number
CH7307
Rev
1A
Date: Monday, January 02, 2006
Sheet 31 of 38

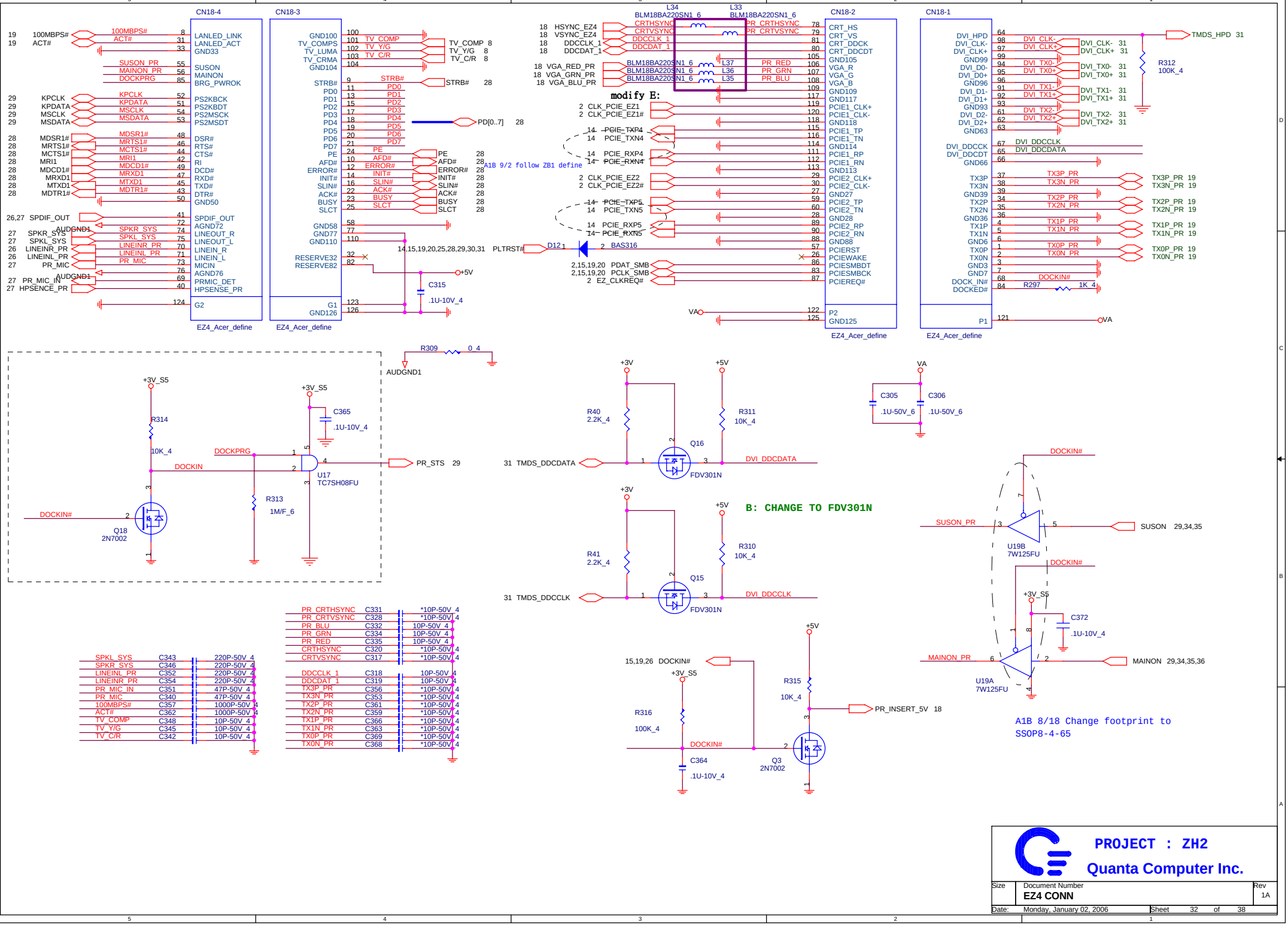
CN18-4
CN18-3
CN18-2
CN18-1
EZ4_Acer_define
modify E:
A1B 9/2 follow ZB1 define
B: CHANGE TO FDV301N
A1B 8/18 Change footprint to SSOP8-4-65
PROJECT : ZH2
Quanta Computer Inc.
Size
Document Number
EZ4 CONN
Rev
1A
Date: Monday, January 02, 2006
Sheet 32 of 38

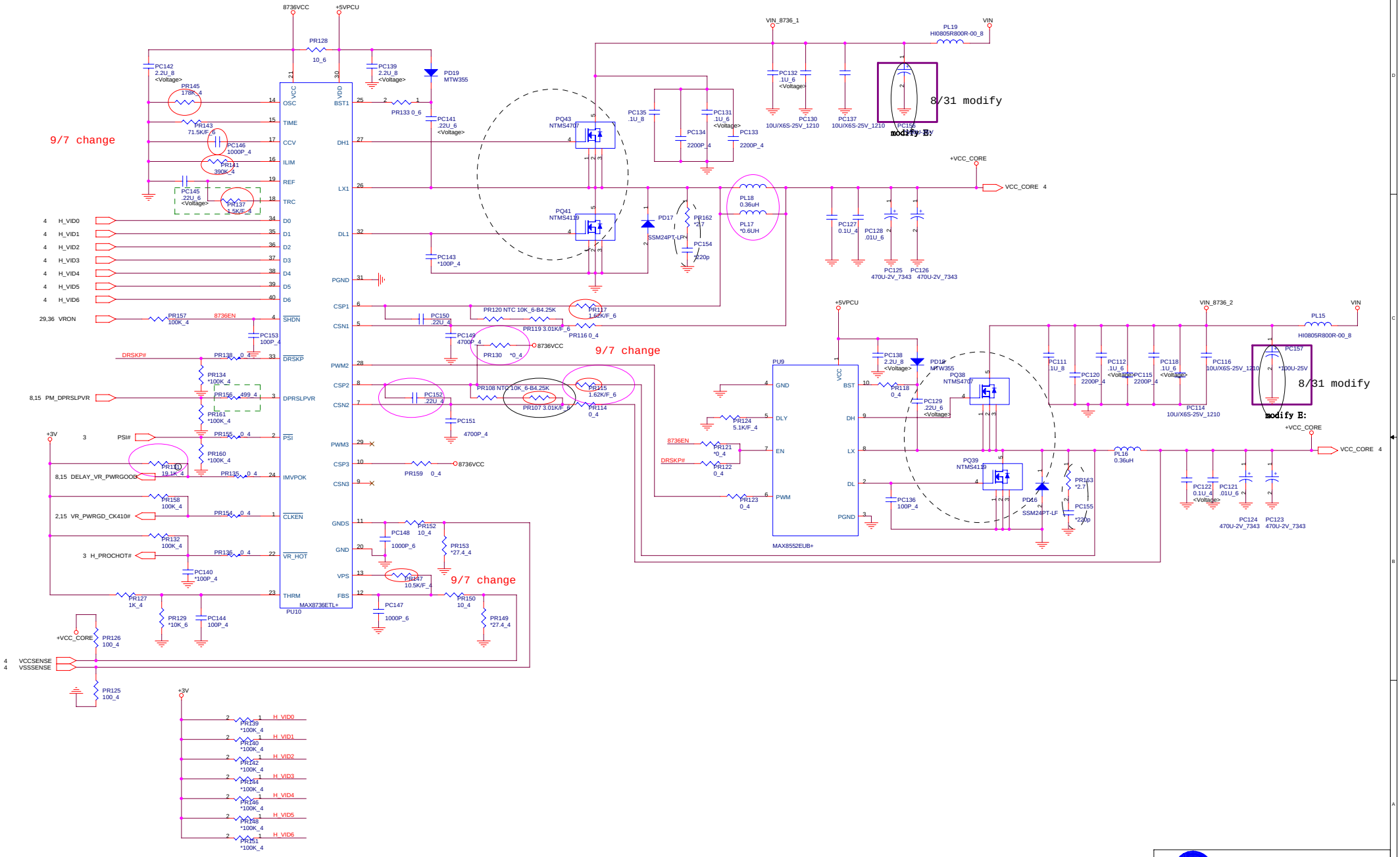

PROJECT : ZH2
Quanta Computer Inc.

Size	Document Number	Rev
	CPU CORE (MAX8736)	3A

Date: Monday, January 02, 2006 Sheet 33 of 38

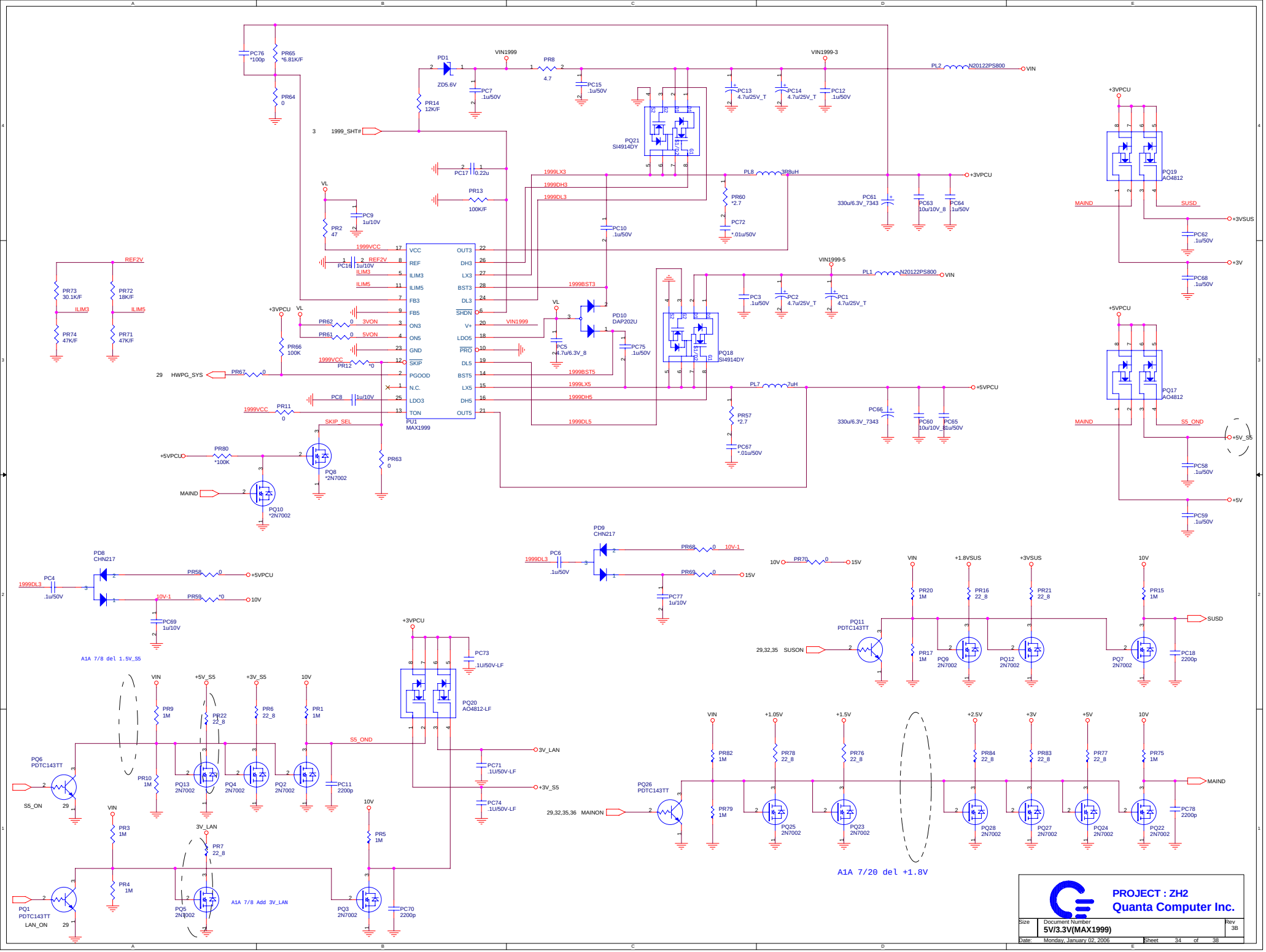
PU1
MAX1999
VCC
REF
ILIM3
ILIM5
FB3
FB5
ON3
ON5
GND
SKIP
PGOOD
N.C.
LDO3
TON
OUT3
DH3
LX3
BST3
DL3
SHDN
V+
LDO5
PRO
DL5
BST5
LX5
DH5
OUT5
PQ21
SI4914DY
PQ18
SI4914DY
PQ19
AO4812
PQ17
AO4812
PQ20
AO4812-LF
PD10
DAP202U
PD1
ZD5.6V
PD8
CHN217
PD9
CHN217
PL2
N20122PS800
PL1
N20122PS800
PL8
3R8uH
PL7
7uH
VIN1999
VIN1999-3
VIN1999-5
+3VPCU
+5VPCU
+3VSUS
+3V
+5V_S5
+5V
MAIND
SUSD
S5_OND
1999_SHT#
HWPG_SYS
REF2V
1999VCC
1999LX3
1999DH3
1999DL3
1999BST3
1999BST5
1999LX5
1999DH5
1999DL5
SKIP_SEL
3VON
5VON
PQ8
2N7002
PQ10
2N7002
PQ11
PDTC143TT
PQ6
PDTC143TT
PQ1
PDTC143TT
LAN_ON
S5_OND
SUSON
MAINON
3V_LAN
+3V_S5
A1A 7/8 del 1.5V_S5
A1A 7/8 Add 3V_LAN
A1A 7/20 del +1.8V
PROJECT : ZH2
Quanta Computer Inc.
Size
Document Number
5V/3.3V(MAX1999)
Rev
3B
Date: Monday, January 02, 2006
Sheet 34 of 38

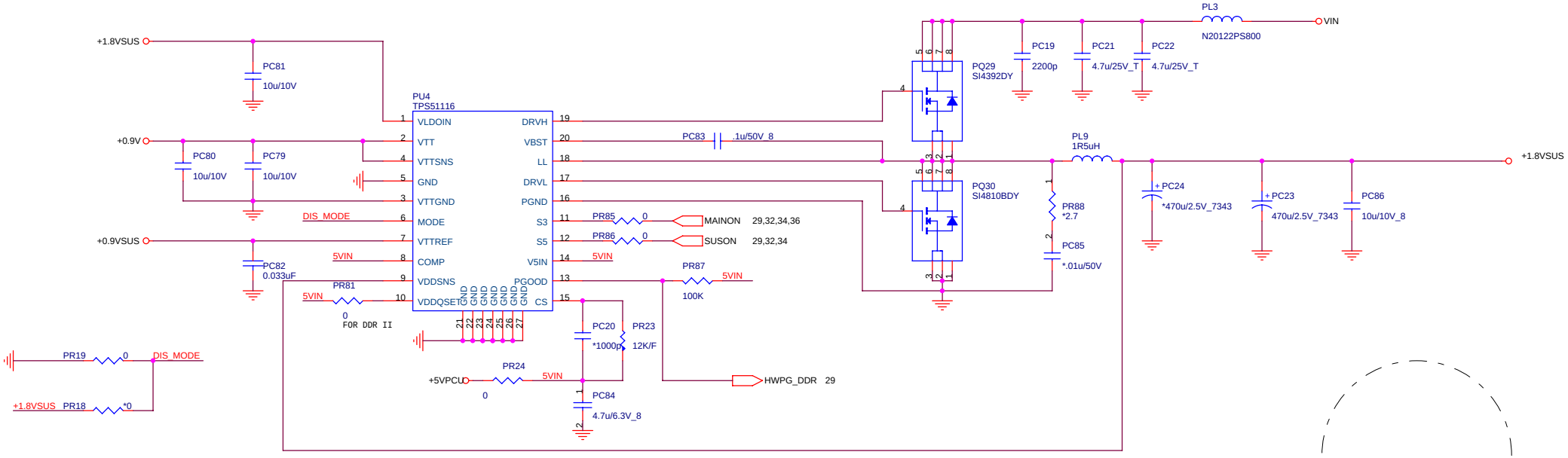

A1A 7/20 del +1.8V

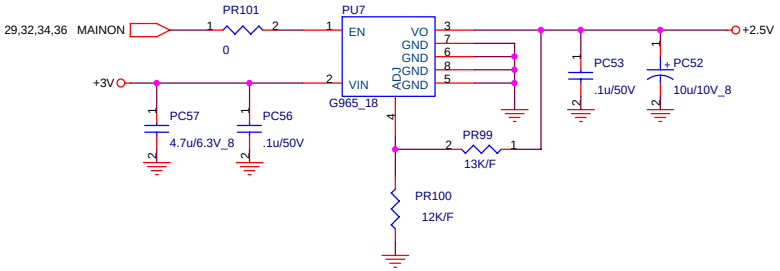

PROJECT : ZH2
Quanta Computer Inc.

Size	Document Number	Rev
	2.5VSUS / 1.25VTERM	3B

Date: Monday, January 02, 2006 Sheet 35 of 38

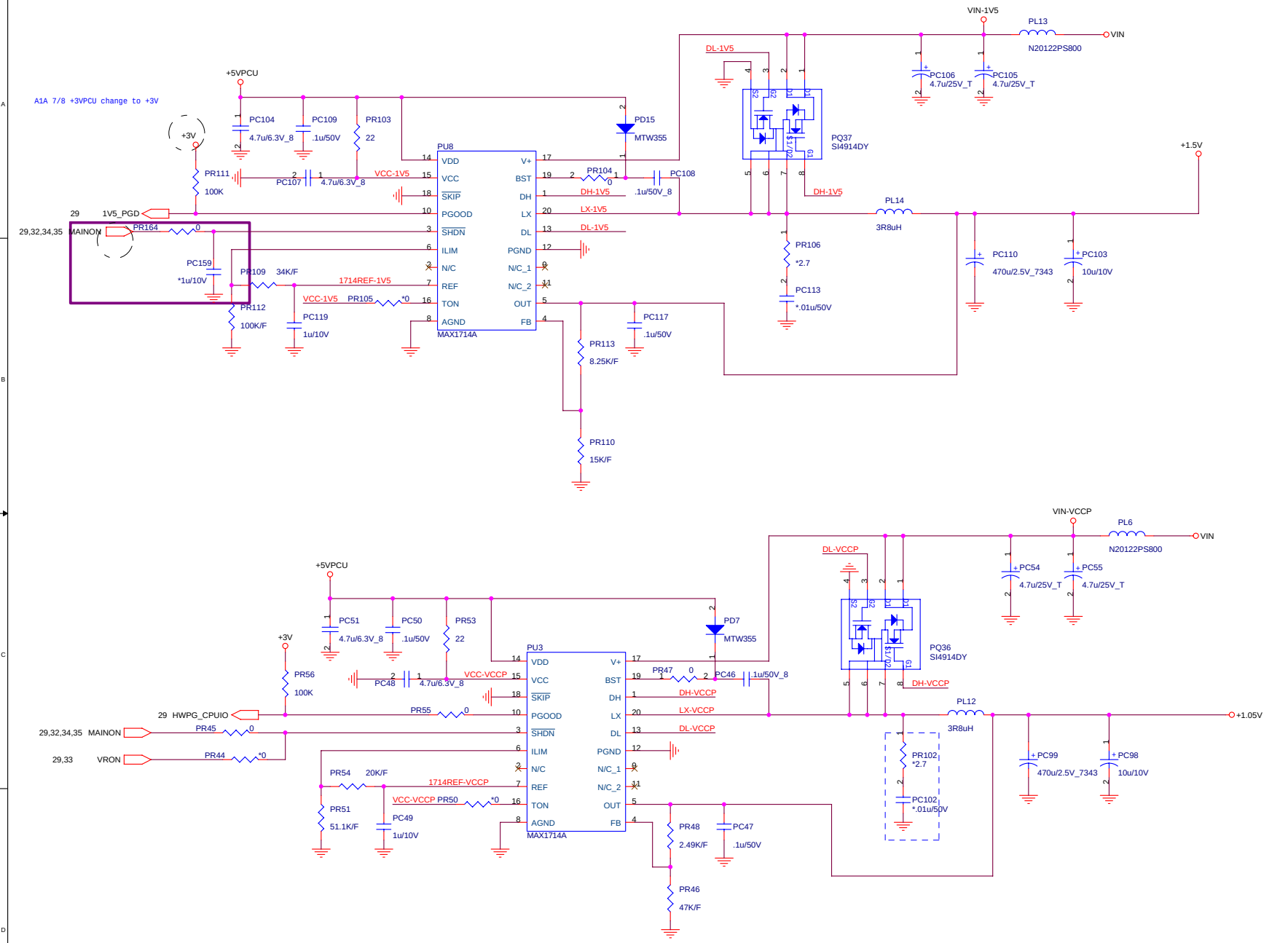

PROJECT : ZH2
Quanta Computer Inc.

Size	Document Number	Rev
	+1.5V / +VCCP	3B

Date: Monday, January 02, 2006 Sheet 36 of 38

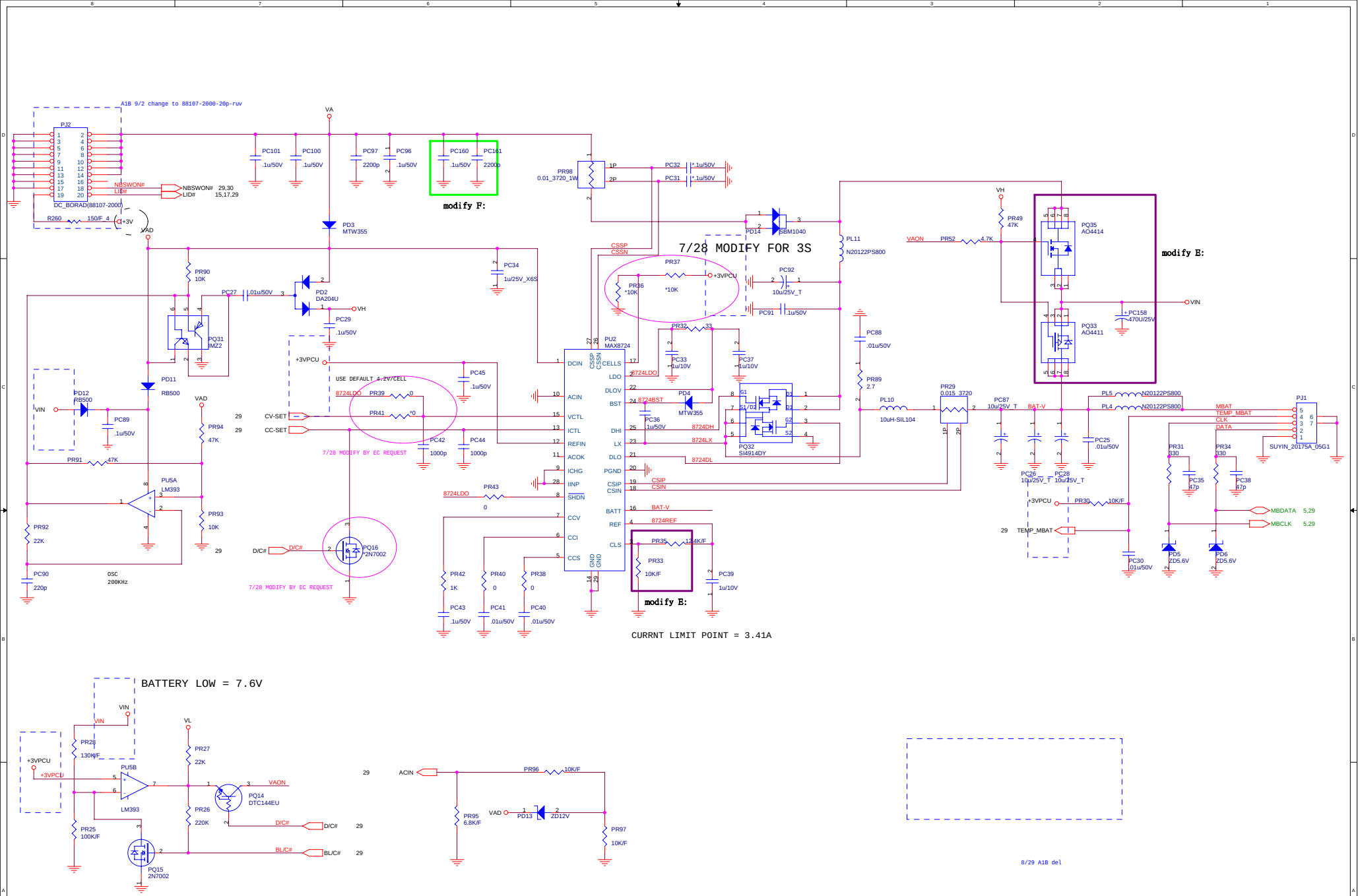
A1B 9/2 change to 88107-2000-20p-ruv
PJ2
DC_BORAD(88107-2000)
NBSWON#
LID#
NBSWON# 29,30
LID# 15,17,29
R260 150/F 4
+3V
VA
VAD
PC101 .1u/50V
PC100 .1u/50V
PC97 2200p
PC96 .1u/50V
PC160 .1u/50V
PC161 2200p
modify F:
PR98 0.01_3720_1W
PC32 *.1u/50V
PC31 *.1u/50V
PD3 MTW355
PD14 SBM1040
7/28 MODIFY FOR 3S
CSSP
CSSN
PR37 *10K
PR36 *10K
+3VPCU
PC92 10u/25V_T
PC91 .1u/50V
PL11 N20122PS800
VAON
PR52 4.7K
VH
PR49 47K
PQ35 AO4414
PQ33 AO4411
modify E:
VIN
PC158 470U/25V
PC34 1u/25V_X6S
PR90 10K
PC27 .01u/50V
PD2 DA204U
PC29 .1u/50V
PQ31 IMZ2
PD11 RB500
PD12 RB500
PC89 .1u/50V
PR94 47K
PR91 47K
PU5A LM393
PR92 22K
PR93 10K
PC90 220p
OSC 200KHz
+3VPCU
USE DEFAULT 4.2V/CELL
8724LDO
PR39 0
PR41 *0
PC45 1u/50V
CV-SET
CC-SET
PC42 1000p
PC44 1000p
7/28 MODIFY BY EC REQUEST
D/C#
PQ16 2N7002
PU2 MAX8724
DCIN
ACIN
VCTL
ICTL
REFIN
ACOK
ICHG
IINP
SHDN
CCV
CCI
CCS
CELLS
LDO
DLOV
BST
DHI
LX
DLO
PGND
CSIP
CSIN
BATT
REF
CLS
GND
8724LDO
PR43 0
PR42 1K
PR40 0
PR38 0
PC43 .1u/50V
PC41 .01u/50V
PC40 .01u/50V
PC33 1u/10V
PR32 33
PC37 1u/10V
8724BST
PD4 MTW355
PC36 1u/50V
8724DH
8724LX
8724DL
PQ32 SI4914DY
CSIP
CSIN
BAT-V
8724REF
PR35 124K/F
PR33 10K/F
modify E:
PC39 1u/10V
CURRNT LIMIT POINT = 3.41A
PC88 .01u/50V
PR89 2.7
PL10 10uH-SIL104
PR29 0.015_3720
PC87 10u/25V_T
BAT-V
PC26 10u/25V_T
PC28 10u/25V_T
PC25 .01u/50V
PL5 N20122PS800
PL4 N20122PS800
MBAT
TEMP_MBAT
CLK
DATA
PJ1
SUYIN_20175A_05G1
PR31 330
PC35 47p
PR34 330
PC38 47p
+3VPCU
PR30 10K/F
TEMP_MBAT
MBDATA 5,29
MBCLK 5,29
PC30 .01u/50V
PD5 ZD5.6V
PD6 ZD5.6V
BATTERY LOW = 7.6V
VIN
PR28 130K/F
+3VPCU
PU5B
LM393
PR25 100K/F
VL
PR27 22K
PR26 220K
PQ14 DTC144EU
VAON
D/C#
BL/C#
PQ15 2N7002
ACIN
PR96 10K/F
PR95 6.8K/F
VAD
PD13 ZD12V
PR97 10K/F
8/29 A1B del
PROJECT : ZH2
Quanta Computer Inc.
Size
Document Number
BATTERY CHARGER
Rev 3A
Date: Thursday, January 05, 2006
Sheet 37 of 38

Change list

Item	Fixed Issue	Reason for change	Schematic Rev.	PG#	Modify List	BD.Ver#
1	TV flicker	stable TV DAC power	E	10	change L52 to 10mH and C528 to 22U	
2	3D 2005 blue screen	+1.8VSUS plant not enough	E	35	add power plant	
3	LAN test	pass signal issue	E	19	change R58 from 1.24k to 1.2k	
4	CRT	pass signgal issue	E	8	change L33~L37 , L26~L27 to BLM18BA220SN1_6	
5	buzzer sound	too small	E	29	Change +3VSUS to +5V_S5	
6	over adaptor current 3.41A	meet adaptor spec	E	37	change PR35 to 12.4k , PR33 to 10k	
7	Chock noise	low freq noise in C3, C4 mode	E	37	change PQ35, PQ33 and add 470U cap	
8	speaker sound	D-A Full-scale output voltage	E	27	mount R531 , remove R532 chagne R360 , R358 to 4.3K	
9	BO BO sound		E	27	883_MUTE pull down 10k and enable high in DOS mode	
10	audio qality	PassBandRipple	E	27	change C422 & C424 to 2.2U	
11	G-sensor	connect to EC	E	25		
12	G-sensor	connect to EC	E	25		